VOLKER HAUG

ANTON

LONGTON GUNMETAL

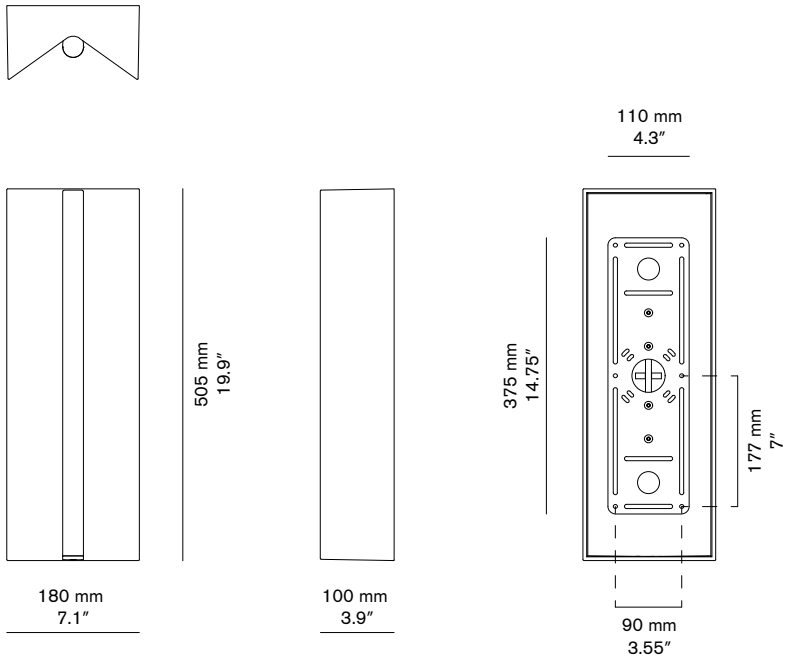

Material
Cast Gunmetal

Finishes
Polished

Diffuser
Ø 28 mm Opal Glass

Weight
10 kg / 22 lb

AU / EU / UK
Lamp: 12V LED PCB
Specs: 2700K, 7.5W, 1000 lm
Dimming: Trailing Edge
Driver: 240V (output 12V, 30W)

Optional
IP44, DALI, 0-10V



LONGTON ALUMINIUM

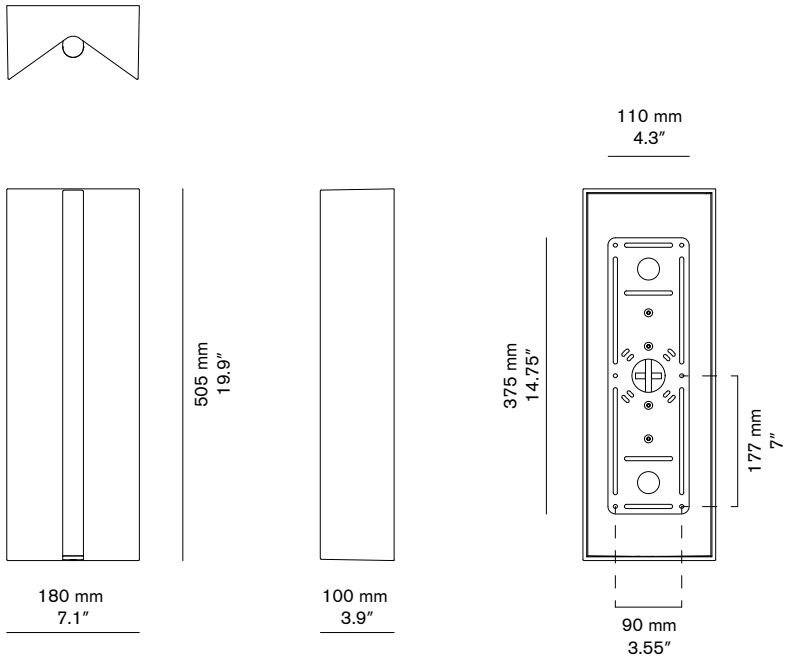

Material
Cast Aluminium

Finishes
Raw (pictured) or Polished

Diffuser
Ø 28 mm Opal Glass

Weight
4 kg / 8.8 lb

AU / EU / UK
Lamp: 12V LED PCB
Specs: 2700K, 7.5W, 1000 lm
Dimming: Trailing Edge
Driver: 240V (output 12V, 30W)

Optional
IP44, DALI, 0-10V



BLOWN GLASS ANTON PATTERN

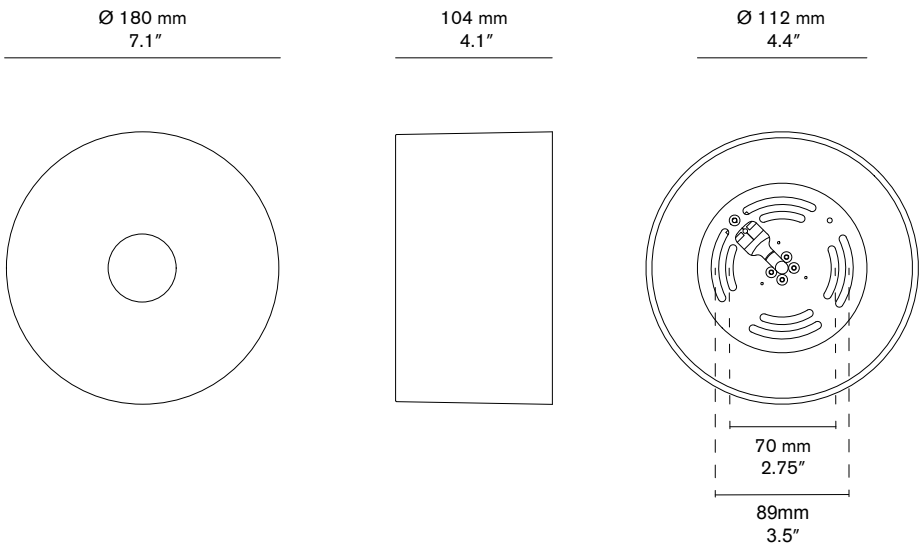

Material
Murano Blown Glass

Colour
Leopard Spot

Diffuser
Ø 45 mm / 1.8" Frosted Glass

Weight
1 kg / 2.2 lb

AU / EU / UK
Lamp: 12V LED PCB
Specs: 2700K, 8W, 700 lm
Dimming: Trailing Edge
Driver: 240V (output 12V, 30W)

Optional
240V, DALI, 0-10V



BLOWN GLASS ANTON OPAL

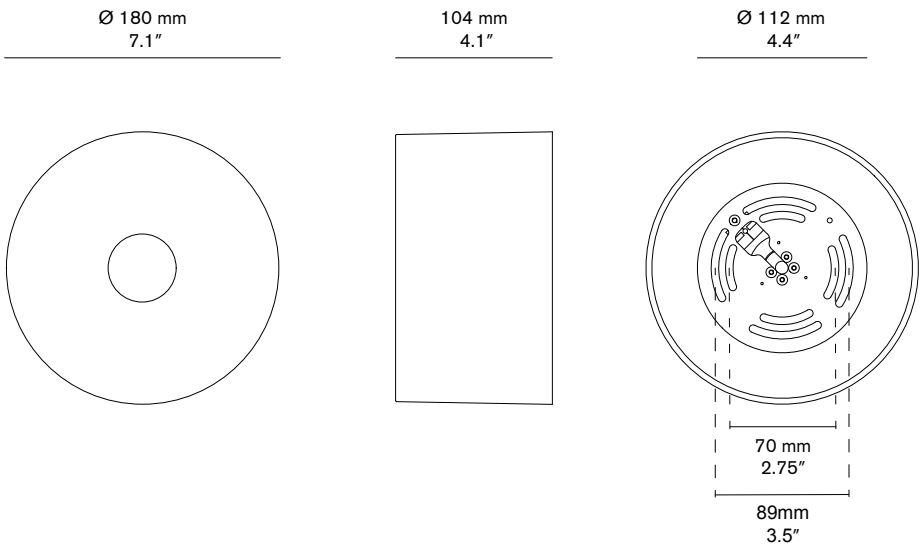

Material
Murano Blown Glass

Colour
Opal White, Honey, Powder Blue

Diffuser
Ø 45 mm / 1.8" Frosted Glass

Weight
1 kg / 2.2 lb

AU / EU / UK
Lamp: 12V LED PCB
Specs: 2700K, 8W, 700 lm
Dimming: Trailing Edge
Driver: 240V (output 12V, 30W)

Optional
240V, DALI, 0-10V







BLOWN GLASS ANTON CLEAR

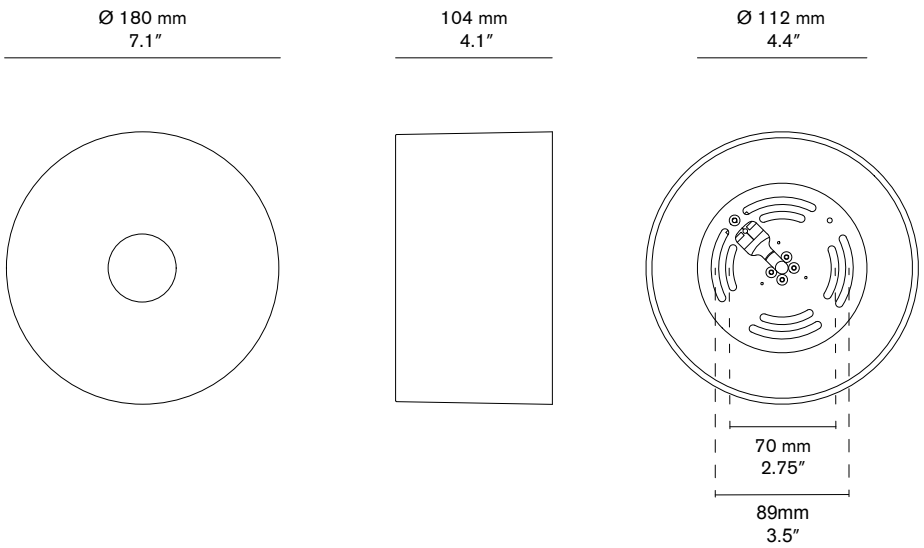

Material
Murano Blown Glass, Brass

Colour
Transparent Clear, Amber, Smoke or Red

Backing Plate
Brushed, Aged or Bronzed Brass;
Brushed Nickel; Chrome Plated; Painted

Diffuser
Ø 45 mm / 1.8" Frosted Glass

Weight
1 kg / 2.2 lb

AU / EU / UK
Lamp: 12V LED PCB
Specs: 2700K, 2.5W, 250 lm
Dimming: Trailing Edge
Driver: 240V (output 12V, 30W)

Optional
240V, DALI, 0-10V









BLOWN GLASS ANTON MINI PATTERN

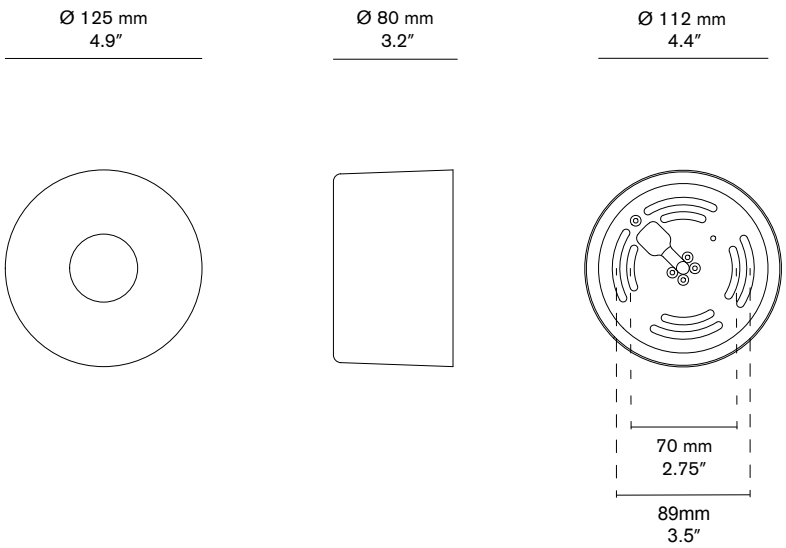

Material
Murano Blown Glass

Colour
Leopard Spot

Diffuser
Ø 45 mm / 1.8" Frosted Glass

Weight
1 kg / 2.2 lb

AU / EU / UK
Lamp: 12V LED PCB
Specs: 2700K, 8W, 700 lm
Dimming: Trailing Edge
Driver: 240V (output 12V, 30W)

Optional
240V, DALI, 0-10V



BLOWN GLASS ANTON MINI OPAL

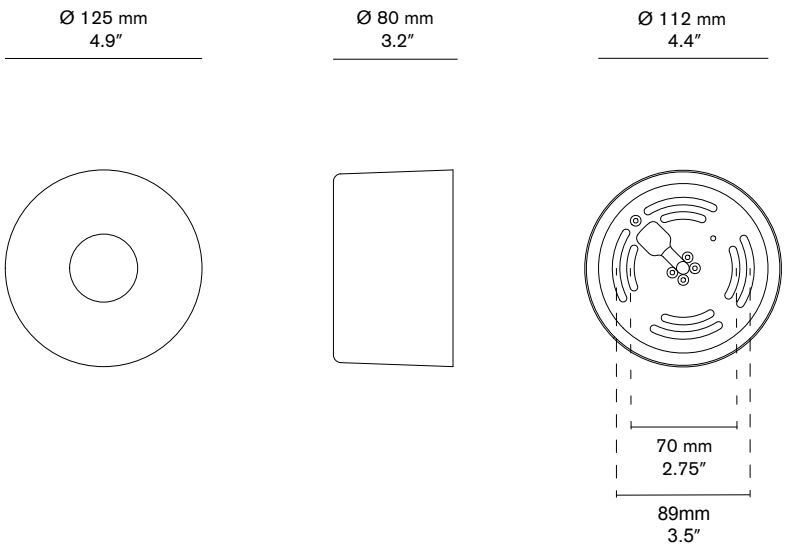

Material
Murano Blown Glass

Colour
Opal White, Honey, Powder Blue

Diffuser
Ø 45 mm / 1.8" Frosted Glass

Weight
1 kg / 2.2 lb

AU / EU / UK
Lamp: 12V LED PCB
Specs: 2700K, 8W, 700 lm
Dimming: Trailing Edge
Driver: 240V (output 12V, 30W)

Optional
240V, DALI, 0-10V





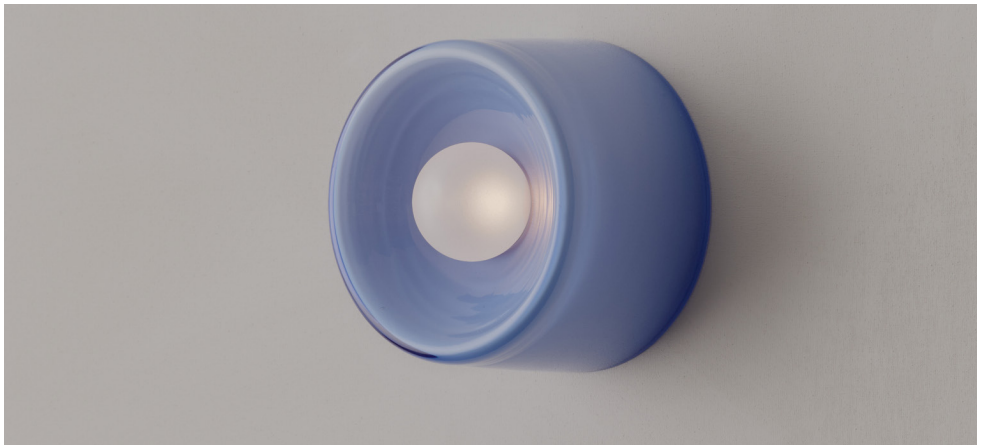

BLOWN GLASS ANTON MINI CLEAR

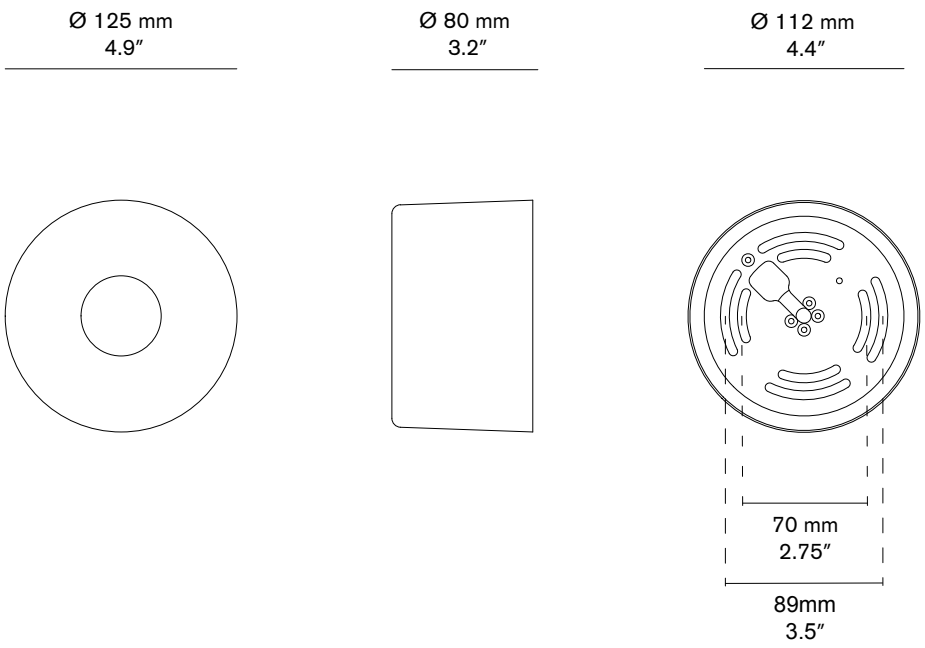

Material
Murano Blown Glass, Brass

Colour
Transparent Clear, Amber, Smoke or Red

Backing Plate
Brushed, Aged or Bronzed Brass;
Brushed Nickel; Chrome Plated; Painted

Diffuser
Ø 45 mm / 1.8" Frosted Glass

Weight
1 kg / 2.2 lb

AU / EU / UK
Lamp: 12V LED PCB
Specs: 2700K, 2.5W, 250 lm
Dimming: Trailing Edge
Driver: 240V (output 12V, 30W)

Optional
240V, DALI, 0-10V









CAST GLASS ANTON MINI

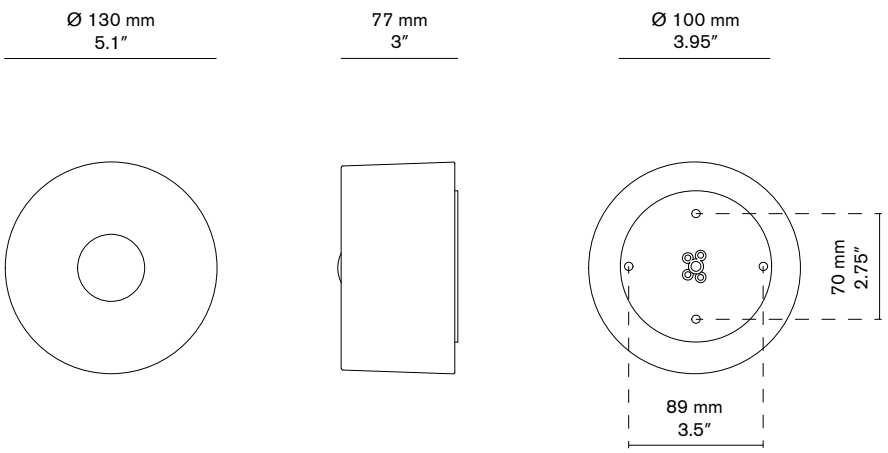

Material
Cast Glass, Brass

Backing Plate
Chrome (standard); Brushed Nickel; White;
Brushed, Aged or Bronzed Brass.

Diffuser
Ø 45 mm / 1.8" Frosted Glass

Weight
2.5 kg / 5.5 lb

AU / EU / UK
Lamp: 240V G9 LED
Specs: 2700K, 2.5W, 250 lm
Dimming: Trailing Edge

Optional
12V, DALI, 0-10V



CAST GLASS ANTON MICRO

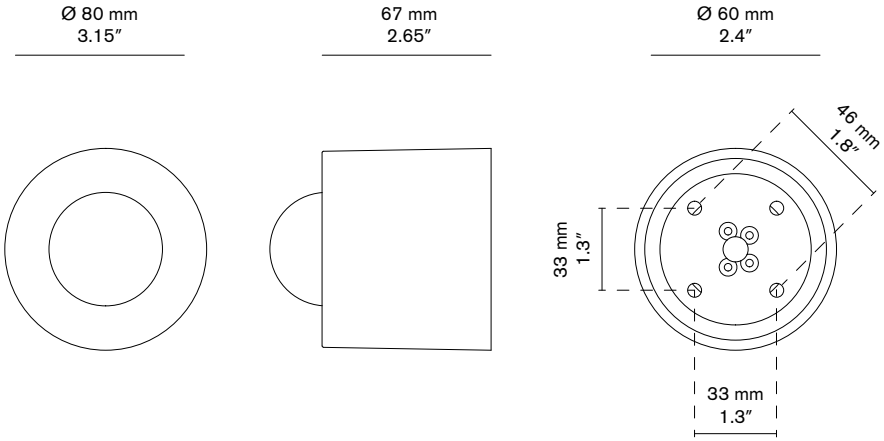

Material
Cast Glass, Brass

Backing Plate
Chrome (standard); Brushed Nickel; White;
Brushed, Aged or Bronzed Brass.

Diffuser
Ø 45 mm / 1.8" Frosted Glass

Weight
0.7 kg / 1.6 lb

AU / EU / UK
Lamp: 240V G9 LED
Specs: 2700K, 2.5W, 250 lm
Dimming: Trailing Edge

Optional
12V, DALI, 0-10V



ANTON CERAMIC

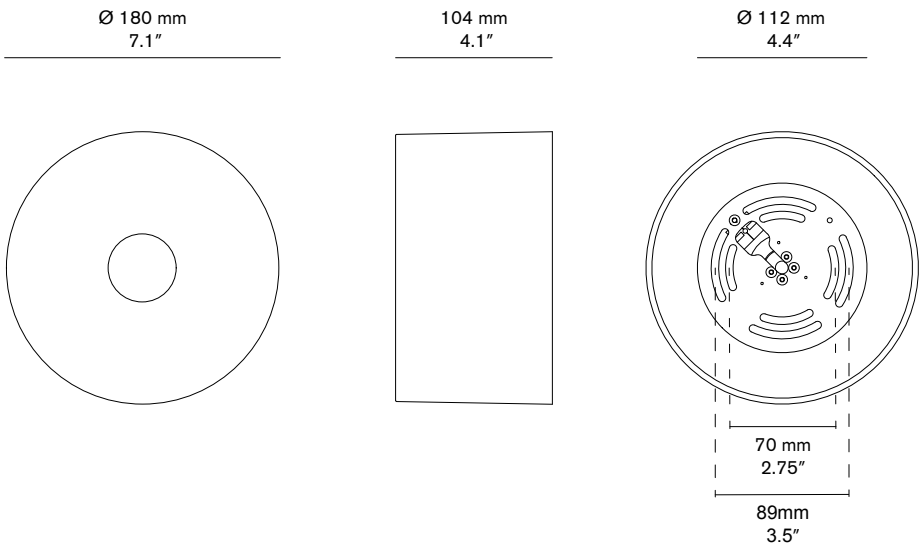

Material
Cast Ceramic

Glaze
Clear Glaze (natural), Crisp White,
Brown, Blue or Green Glaze

Diffuser
Ø 45 mm / 1.8” Frosted Glass

Weight
1.5 kg / 3.3 lb

AU / EU / UK
Lamp: 240V G9 LED
Specs: 2700K, 2.5W, 250 lm
Dimming: Trailing Edge

Optional
12V, IP44, DALI, 0-10V









ANTON MINI CERAMIC

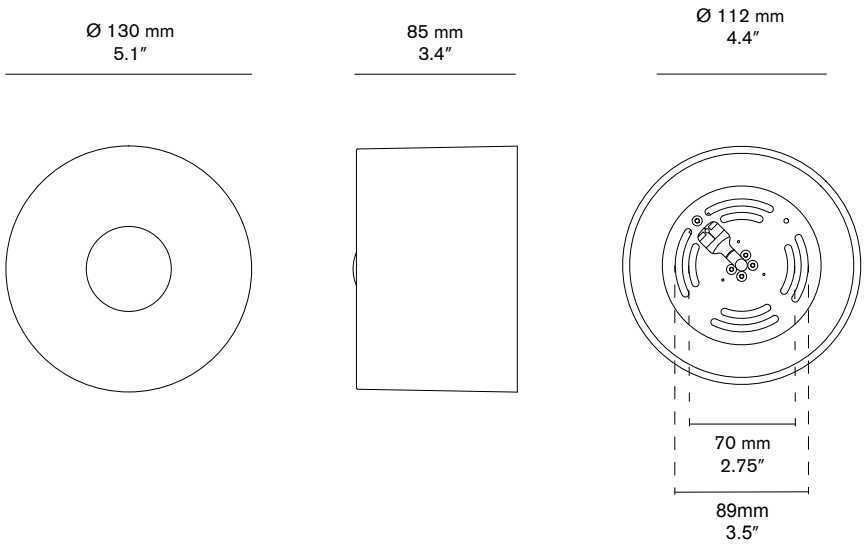

Material
Cast Ceramic

Glaze
Clear Glaze (natural), Crisp White,
Brown, Blue or Green Glaze

Diffuser
Ø 45 mm / 1.8” Frosted Glass

Weight
1 kg / 2.2 lb

AU / EU / UK
Lamp: 240V G9 LED
Specs: 2700K, 2.5W, 250 lm
Dimming: Trailing Edge

Optional
12V, IP44, DALI, 0-10V









ANTON MICRO CERAMIC

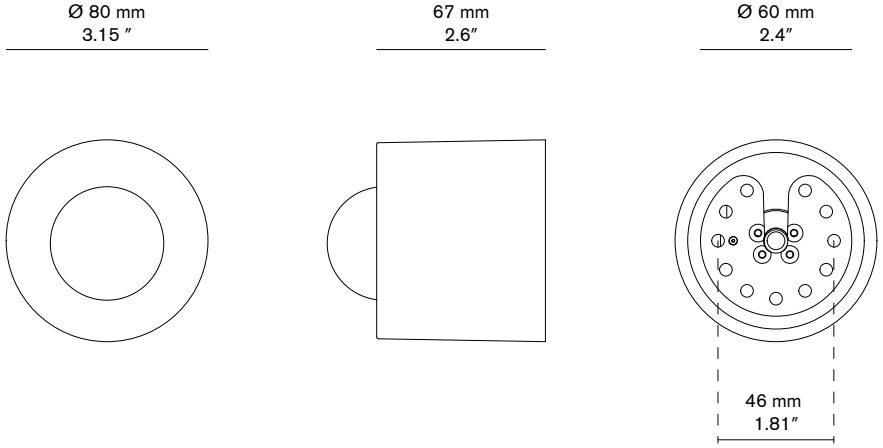

Material
Cast Ceramic

Glaze
Clear Glaze (natural), Crisp White,
Brown, Blue or Green Glaze

Diffuser
Ø 45 mm / 1.8” Frosted Glass

Weight
400 g / 14 oz

AU / EU / UK
Lamp: 240V G9 LED
Specs: 2700K, 2.5W, 250 lm
Dimming: Trailing Edge

Optional
12V, IP44, DALI, 0-10V









ANTON CERAMIC PINSTRIPE

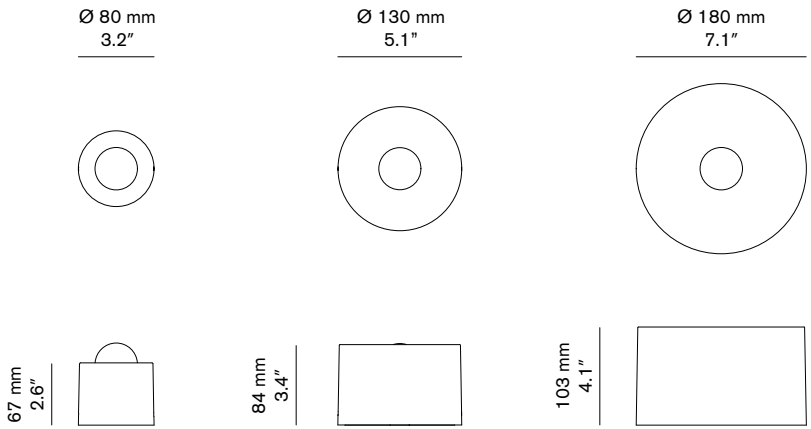

Material
Cast Ceramic with Clear Glaze

Pinstripe
Charcoal, Tan, Burgundy or Bush

Diffuser
Ø 45 mm / 1.8" Frosted glass

Sizes
Anton Micro, Anton Mini (pictured) and Anton

AU / EU / UK
Lamp: 240V G9 LED
Specs: 2700K, 2.5W, 250 lm
Dimming: Trailing Edge

Optional
12V, IP44, DALI, 0-10V



ANTON GUNMETAL

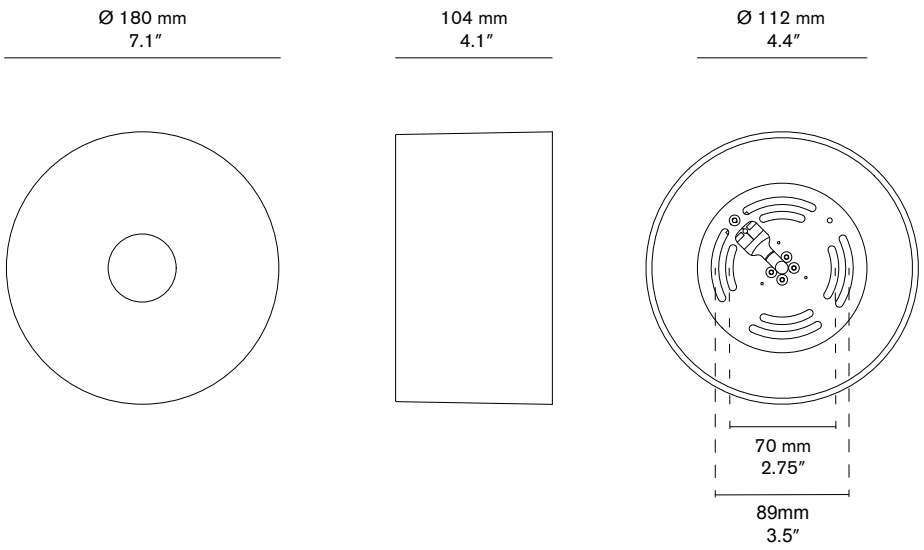

Material
Cast Gunmetal

Finish
Polished

Diffuser
Ø 45 mm / 1.8" Frosted glass

Weight
4.3 kg / 9.5 lb

AU / EU / UK
Lamp: 240V G9 LED
Specs: 2700K, 2.5W, 250 lm
Dimming: Trailing Edge

Optional
12V, IP44, DALI, 0-10V



ANTON ALUMINIUM

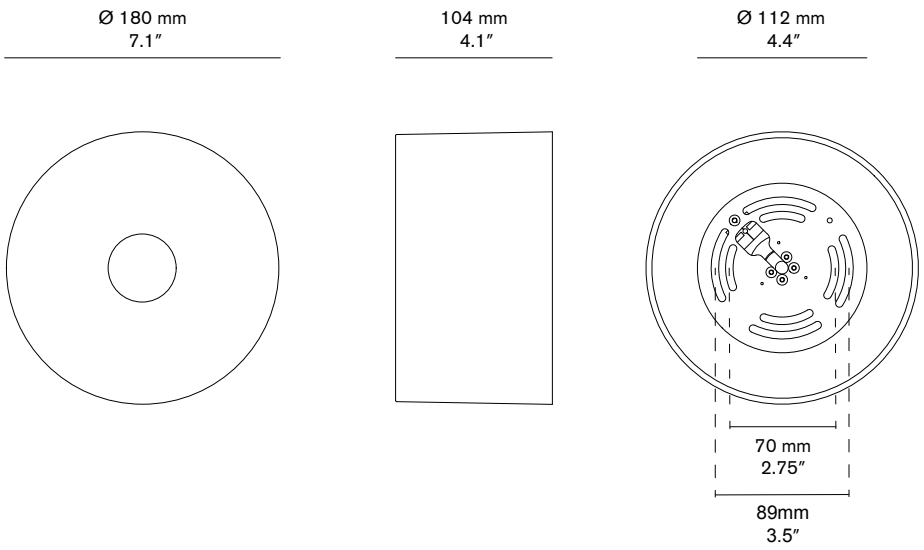

Material
Cast Aluminium

Finishes
Raw or Polished (both pictured)

Diffuser
Ø 45 mm / 1.8” Frosted glass

Weight
1.4 kg / 3 lb

AU / EU / UK
Lamp: 240V G9 LED
Specs: 2700K, 2.5W, 250 lm
Dimming: Trailing Edge

Optional
12V, IP44, DALI, 0-10V





ANTON MINI GUNMETAL

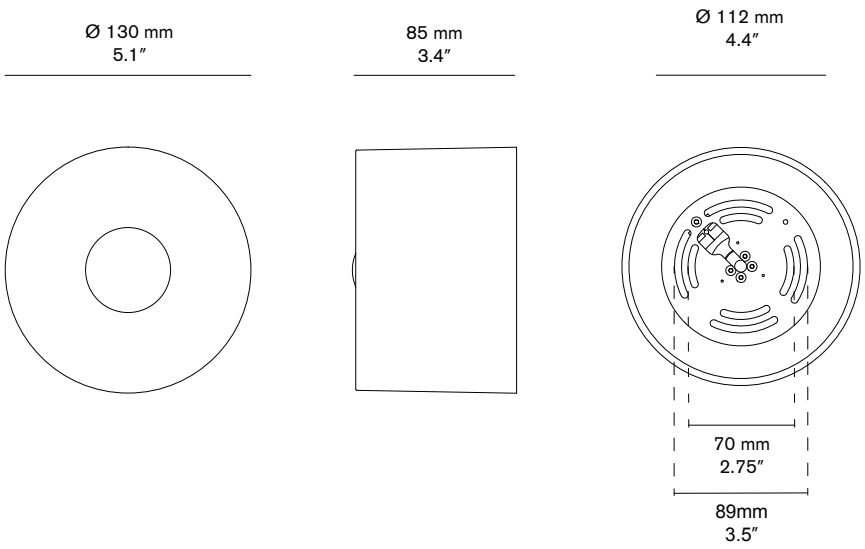

Material
Cast Gunmetal

Finish
Polished

Diffuser
Ø 45 mm / 1.8” Frosted glass

Weight
2.5 kg / 5.5 lb

AU / EU / UK
Lamp: 240V G9 LED
Specs: 2700K, 2.5W, 250 lm
Dimming: Trailing Edge

Optional
12V, IP44, DALI, 0-10V



ANTON MINI ALUMINIUM

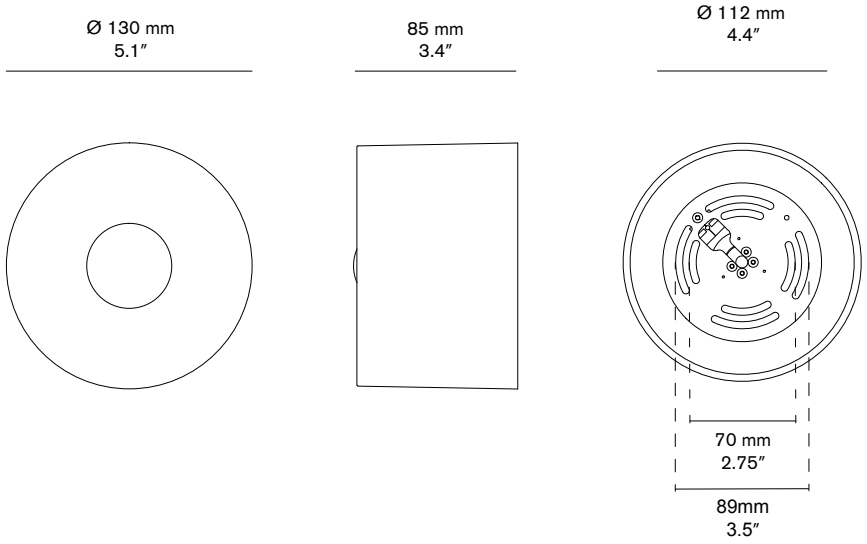

Material
Cast Aluminium

Finishes
Raw or Polished (pictured)

Diffuser
Ø 45 mm / 1.8” Frosted glass

Weight
800 g / 1.75 lb

AU / EU / UK
Lamp: 240V G9 LED
Specs: 2700K, 2.5W, 250 lm
Dimming: Trailing Edge

Optional
12V, IP44, DALI, 0-10V



ANTON MICRO GUNMETAL

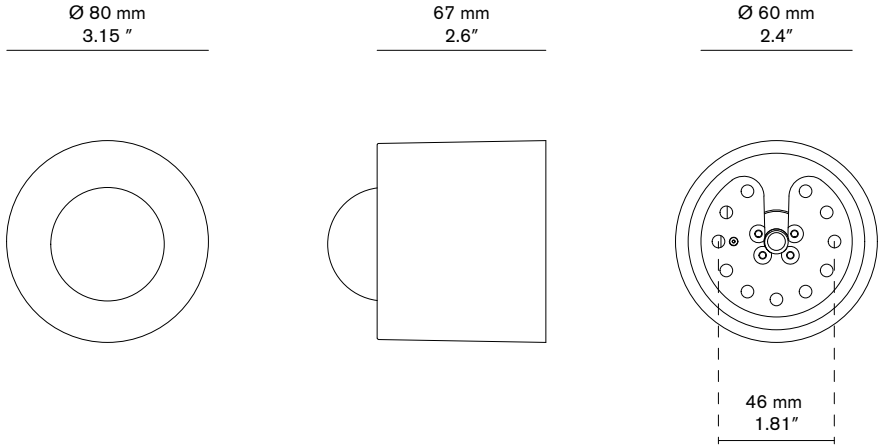

Material
Cast Gunmetal

Finish
Polished

Diffuser
Ø 45 mm / 1.8” Frosted glass

Weight
1 kg / 2.2 lb

AU / EU / UK
Lamp: 240V G9 LED
Specs: 2700K, 2.5W, 250 lm
Dimming: Trailing Edge

Optional
12V, IP44, DALI, 0-10V



ANTON MICRO ALUMINIUM

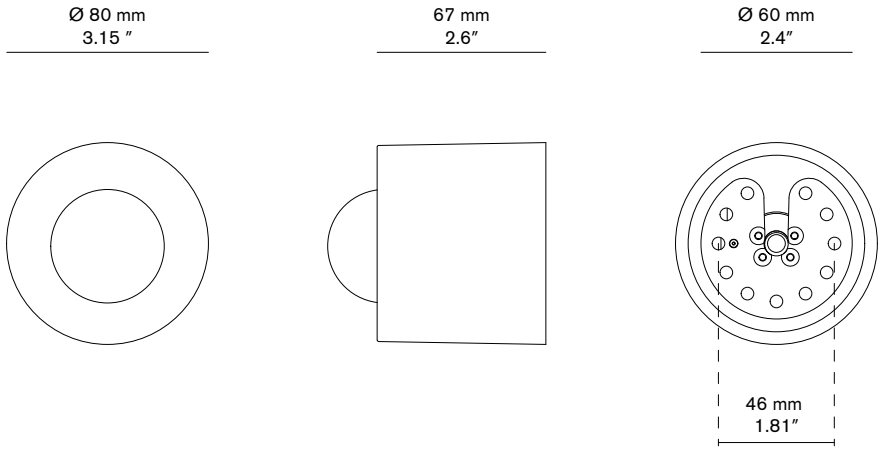

Material
Cast Aluminium

Finishes
Raw (pictured) or Polished

Diffuser
Ø 45 mm / 1.8” Frosted glass

Weight
400 g / 14 oz

AU / EU / UK
Lamp: 240V G9 LED
Specs: 2700K, 2.5W, 250 lm
Dimming: Trailing Edge

Optional
12V, IP44, DALI, 0-10V



TABLETON TALL GUNMETAL

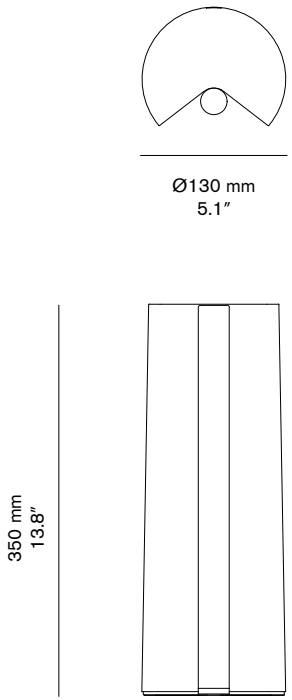

Material
Cast Gunmetal

Finish
Polished

Diffuser
Ø 28 mm / 1.1” Opal glass

Weight
9 kg / 20 lb

AU / EU / UK
Lamp: 12V LED PCB
Specs: 2700K, 6W, 800 lm
Dimming: Yes (in-line dimmer switch)
Plug: 240V (AU, EU or UK compatible)



TABLETON TALL ALUMINIUM

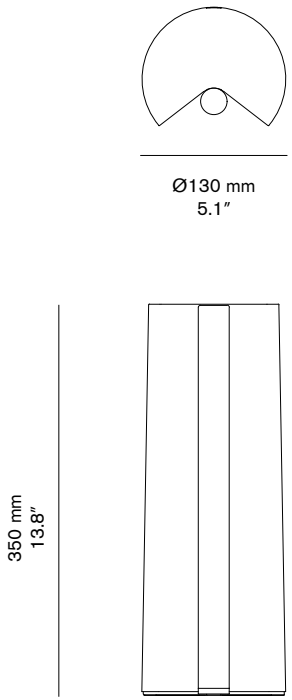

Material
Cast Aluminium

Finishes
Raw or Polished (pictured)

Diffuser
Ø 28 mm / 1.1” Opal glass

Weight
4.5 kg / 10 lb

AU / EU / UK
Lamp: 12V LED PCB
Specs: 2700K, 6W, 800 lm
Dimming: Yes (in-line dimmer switch)
Plug: 240V (AU, EU or UK compatible)



TABLETON SMALL GUNMETAL

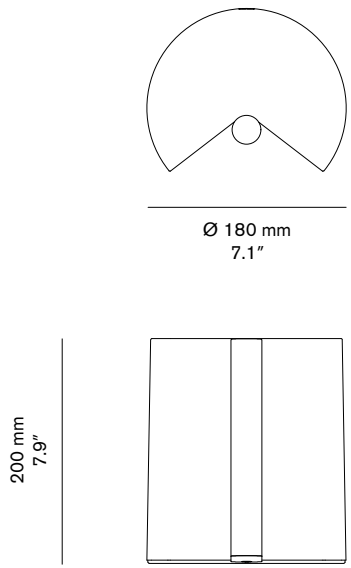

Material
Cast Gunmetal

Finish
Polished

Diffuser
Ø 28 mm / 1.1” Opal glass

Weight
8 kg / 17.6 lb

AU / EU / UK
Lamp: 12V LED PCB
Specs: 2700K, 3.5W, 500 lm
Dimming: Yes (in-line dimmer switch)
Plug: 240V (AU, EU or UK compatible)



TABLETON SMALL ALUMINIUM

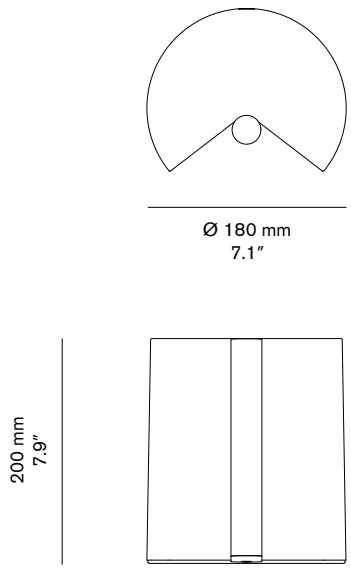

Material
Cast Aluminium

Finishes
Raw (pictured) or Polished

Diffuser
Ø 28 mm / 1.1" Opal glass

Weight
3 kg / 6.6 lb

AU / EU / UK
Lamp: 12V LED PCB
Specs: 2700K, 3.5W, 500 lm
Dimming: Yes (in-line dimmer switch)
Plug: 240V (AU, EU or UK compatible)



GLASS ANTON MINI TABLE LAMP

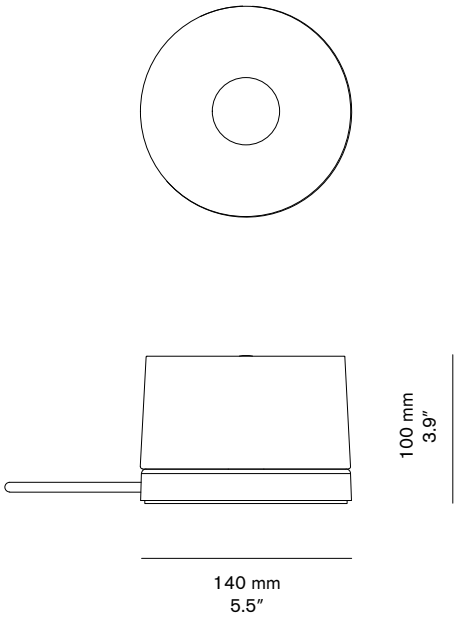

Material
Cast Glass (body); Cast Aluminium
or Cast Gunmetal (base)

Finish
Polished Aluminium (pictured) or Polished Gunmetal

Diffuser
Ø 45 mm / 1.8” Frosted glass

Weight
Aluminium 2 kg / 4.4 lb
Gunmetal 2.5 kg / 5.5 lb

AU / EU / UK
Lamp: 12V LED PCB
Specs: 2700K, 3W, 300 lm
Dimming: Yes (in-line dimmer switch)
Plug: 240V (AU, EU or UK compatible)

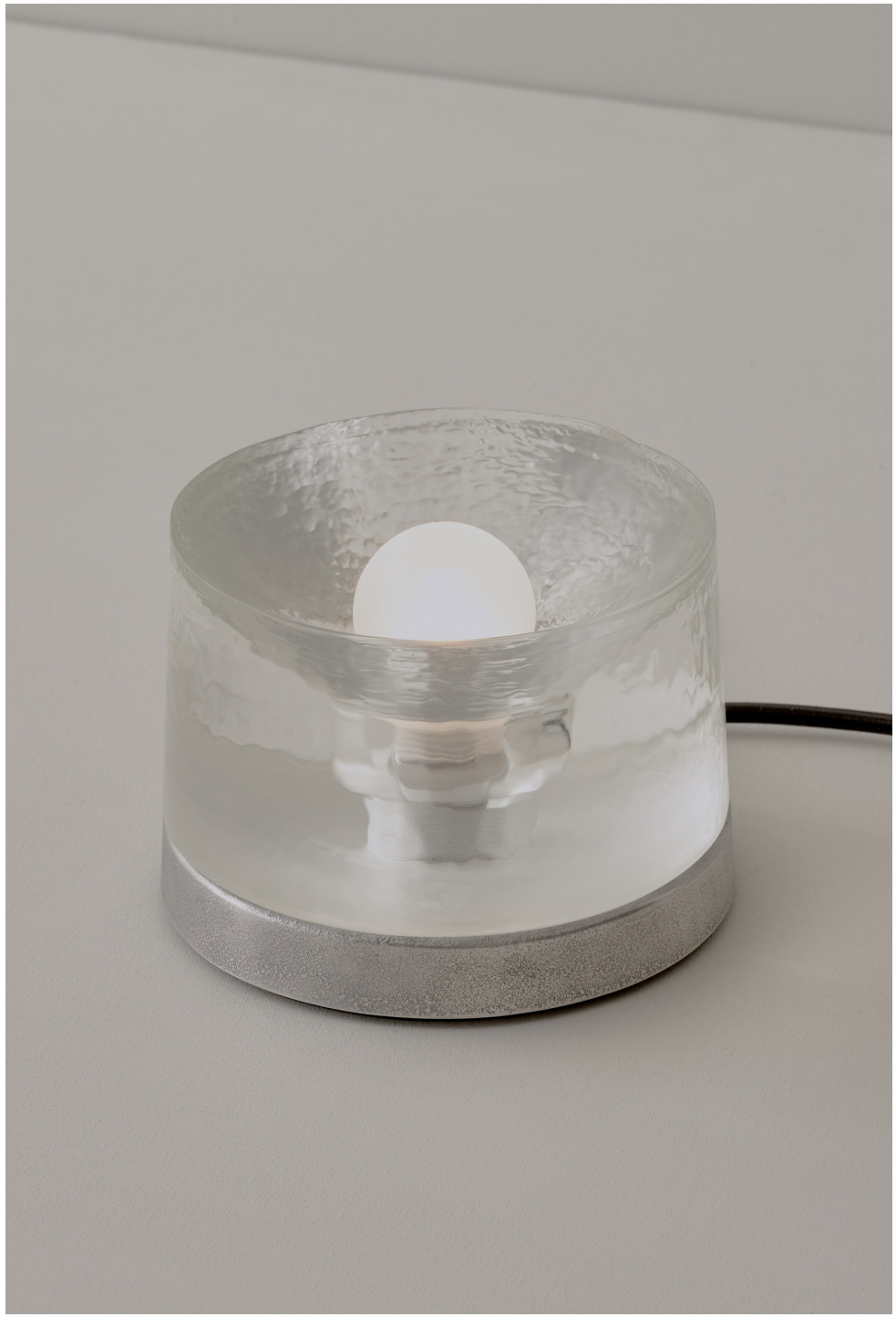

VOLKER HAUG

v.01.2025

2–12 St Phillip Street
Brunswick East, Vic 3057
Melbourne, Australia

Phone +61 3 9387 1803
Email info@volkerhaug.com
www.volkerhaug.com