V.BROKKR · MELBOURNE

Vala Joinery Pull

Joinery knob



Sand-cast copper with a vitreous enamel centre, finished in aged copper and sealed in beeswax. Slight colour variation is part of each firing.

SIZES	Small: 18 mm Ø × 25 H mm · Large: 30 mm Ø × 30 H mm
MATERIAL	Sand-cast copper, vitreous enamel
FINISHES	Aged copper, beeswax sealed
ENAMEL COLOURS	Sky blue · Burnt orange · Bottle green · Off-white · Egg yellow · Clear · Maroon
WEIGHT	Small approx. 0.055 kg · Large approx. 0.15 kg
INSTALLATION	Small: 1 × M5 screw, 5 mm clearance hole. Large: 1 × M6 screw, 6 mm clearance hole. Length to suit the application.
CARE	Handle with care: dropping the pull or hard knocks will damage the enamel.
LEAD TIME	2–3 weeks when V.Brokkr has it in stock (confirmed in your quote); otherwise 6–8 weeks, made to order (8–10 weeks over Christmas and January)

HANDMADE

Each piece is cast, carved or forged by hand in V.Brokkr's Melbourne studio. Small variations in form, colour and finish are part of the making, not a fault.

LIVING FINISHES

Brass, bronze and copper develop a natural patina with use. Avoid harsh solvents and abrasives. Care instructions are supplied with every order.

CUSTOM ORDERS

Custom finishes, sizes and back-to-back fixings are available on request. Final specifications are confirmed in your quote.

V.BROKKR · DIMENSIONS

Vala Joinery Pull

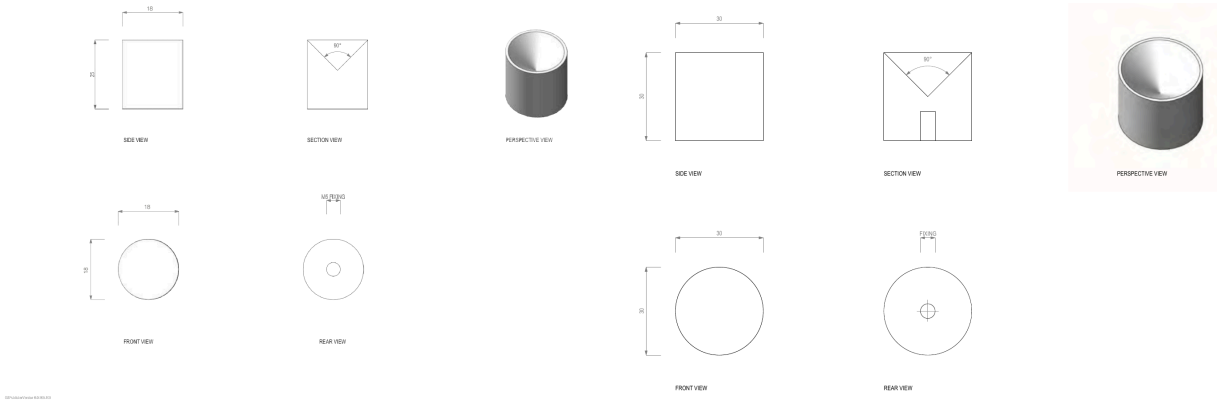

SMALL – Ø18 MM

LARGE – Ø30 MM

All dimensions in millimetres and approximate. Each piece is made by hand, so sizes vary slightly. Drawings courtesy of V.Brokkr.