VOLKER HAUG STUDIO AND FLACK STUDIO

ME AND YOU

FLEUR

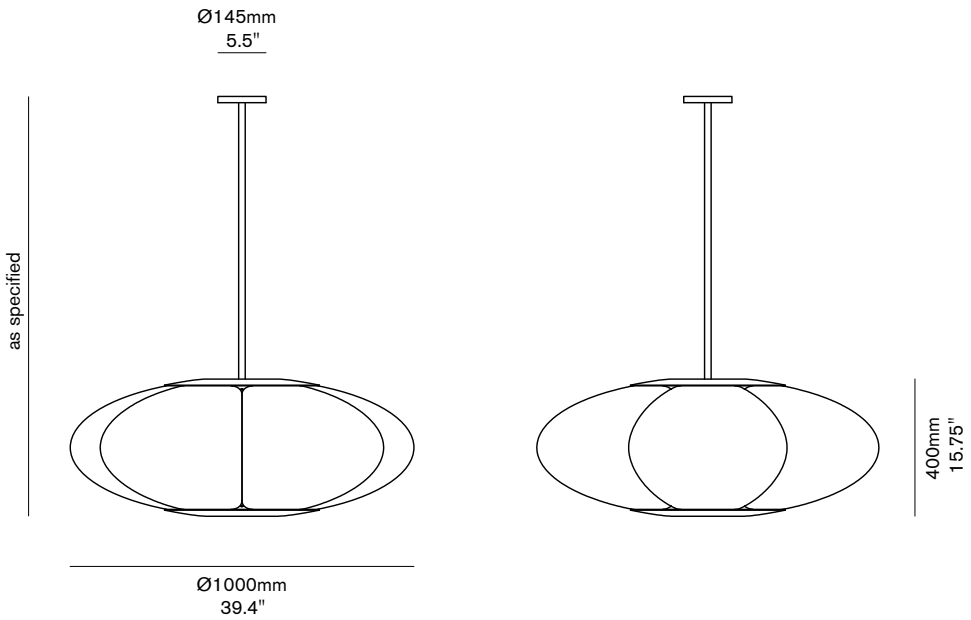

Material
Brass and Fibreglass

Finishes
Brushed, Aged or Bronzed Brass;
Chrome, Brushed Nickel

Diffuser
Fibreglass

Weight
20 kg / 44 lb

AU / EU / UK
Lamp: 6x 240V E27 LED
Lamp Specs: 2700K, 8W, 800 lm
Dimming: Trailing Edge

Optional
12V, DALI, 0-10V



FLEUR 70

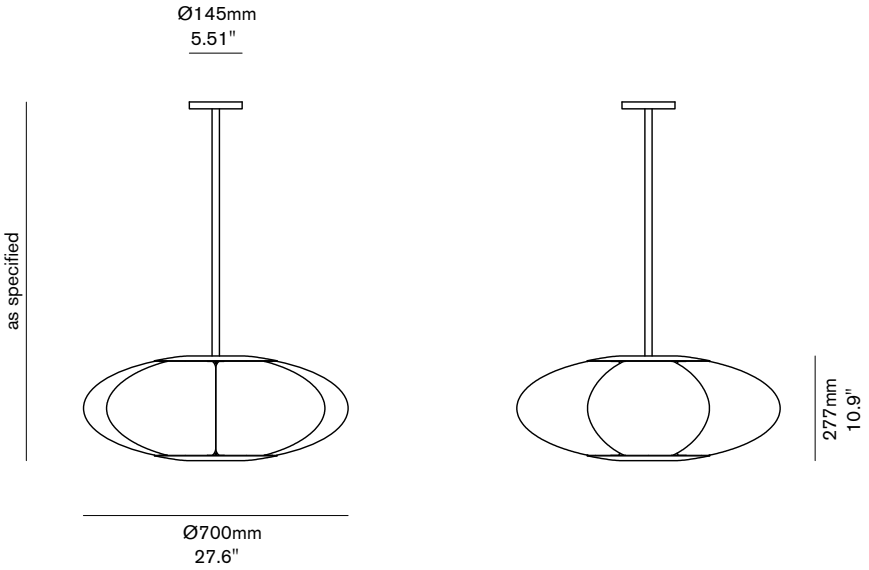

Material
Brass and Fibreglass

Finishes
Brushed, Aged or Bronzed Brass;
Chrome, Brushed Nickel

Diffuser
Fibreglass

Weight
14 kg / 31 lb

AU / EU / UK
Lamp: 6x 240V E27 LED
Lamp Specs: 2700K, 8W, 800 lm
Dimming: Trailing Edge

Optional
12V, DALI, 0-10V



TUX PENDANT

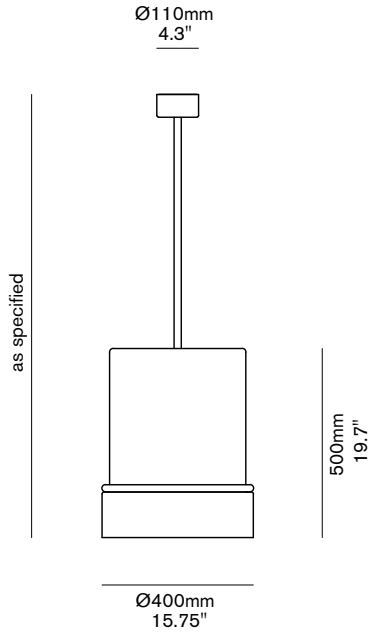

Material
Brass and Fibreglass; Blown Glass Rondel

Finishes
Brushed, Aged or Bronzed Brass;
Chrome, Brushed Nickel; Painted

Diffuser
Fibreglass

Weight
15 kg / 33 lb

AU / EU / UK
Lamp: 12V LED PCB
Lamp Specs: 2700K, 12W, 2000 lm
Dimming: Trailing Edge
Driver: 240V (output 12V, 30W)

Optional
DALI, 0-10V



TUX

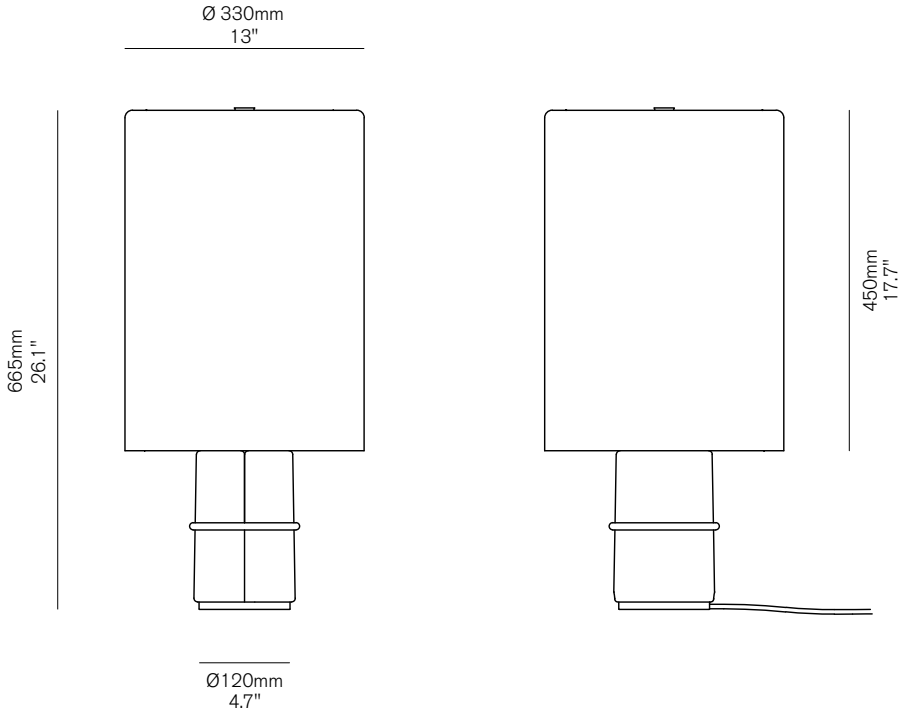

Material
Brass and Fibreglass; Cast Glass Base

Finishes
Brushed, Aged or Bronzed Brass;
Chrome, Brushed Nickel; Painted

Diffuser
Fibreglass

Weight
10 kg / 22 lb

AU / EU / UK
Lamp: 12V LED PCB
Lamp Specs: 2700K, 10W, 1500 lm
Dimming: Yes (in-line dimmer switch)
Plug: 240V (AU, EU or UK compatible)



DADO

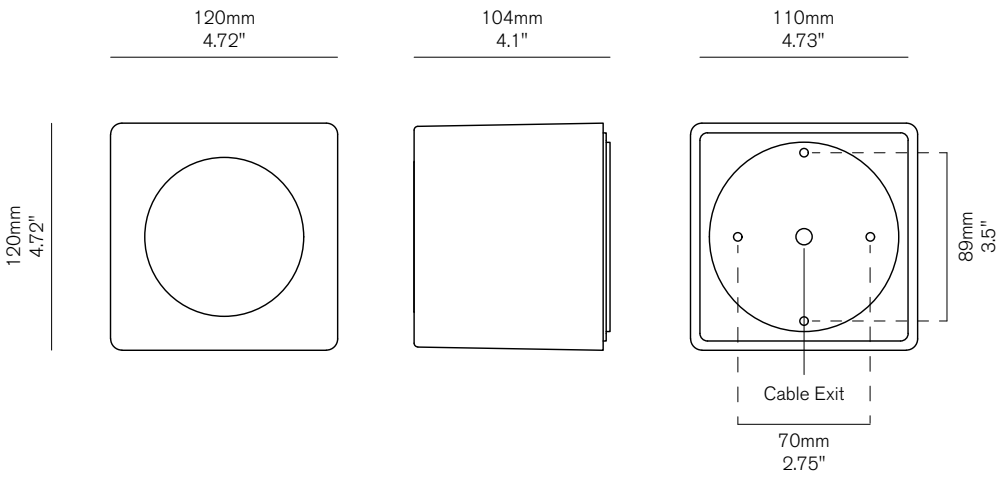

Material
Cast Glass

Reflector
Cast Aluminium or Cast Brass

Weight
Brass 2.8 kg / 6 lb
Aluminium 2.6 kg / 6 lb

AU / EU / UK
Lamp: 240V G9 LED
Lamp Specs: 2700K, 2.5W, 250 lm
Dimming: Trailing Edge

Note: Not compatible with halogen

Optional
12V, DALI, 0-10V



TUX WALL

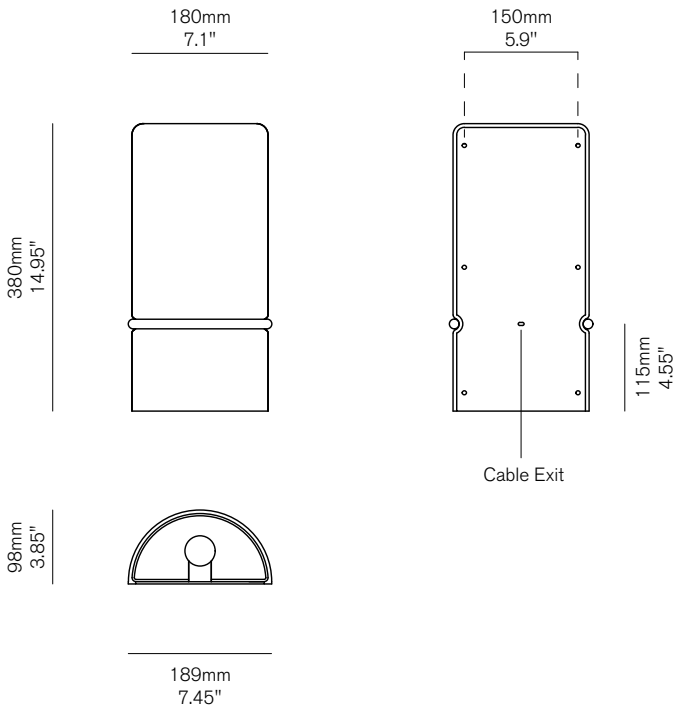

Material
Brass and Fibreglass

Finishes
Brushed, Aged or Bronzed Brass;
Polished Brass; Chrome, Brushed Nickel

Diffuser
Fibreglass

Weight
4 kg / 8.8 lb

AU / EU / UK
Lamp: 12V LED PCB
Lamp Specs: 2700K, 9W, 1200 lm
Dimming: Trailing Edge
Driver: 240V (output 12V, 30W)

Optional
DALI, 0-10V



BRUCE ALTO

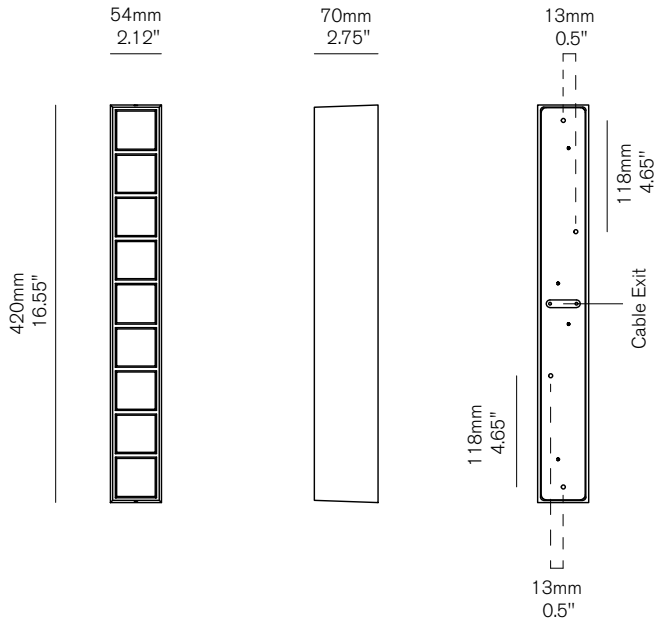

Material
Cast Brass or Cast Aluminium

Finish
Semi-polished

Diffuser
Opal Plate Glass

Weight
Brass 3.4 kg / 7.5 lb
Aluminium 1.4 kg / 3.1 lb

AU / EU / UK
Lamp: 12V LED PCB
Specs: 2700K, 7W
Dimming: Trailing Edge
Driver: 240V (output 12V, 30W)

Optional
DALI, 0-10V

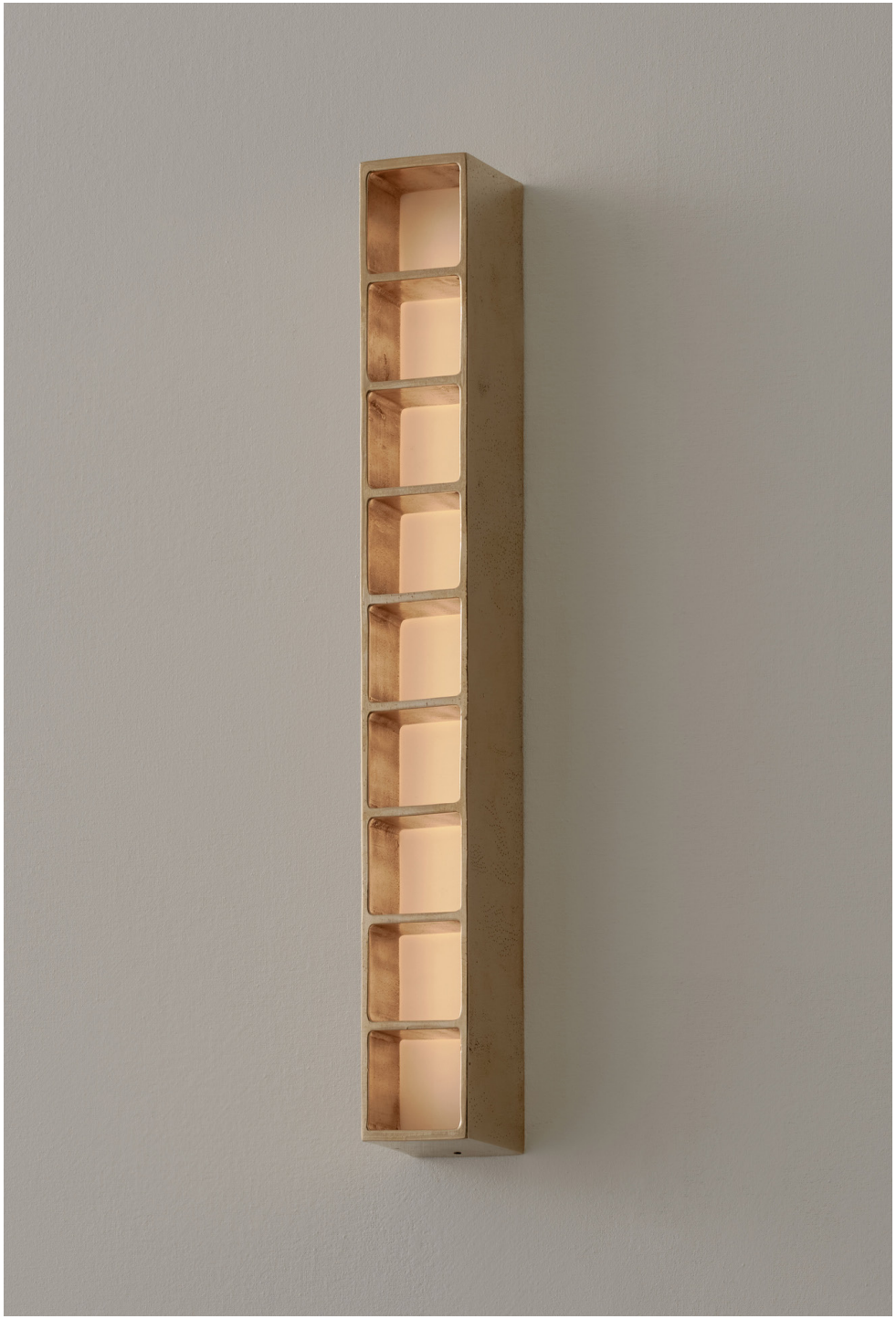

BABY BRUCE

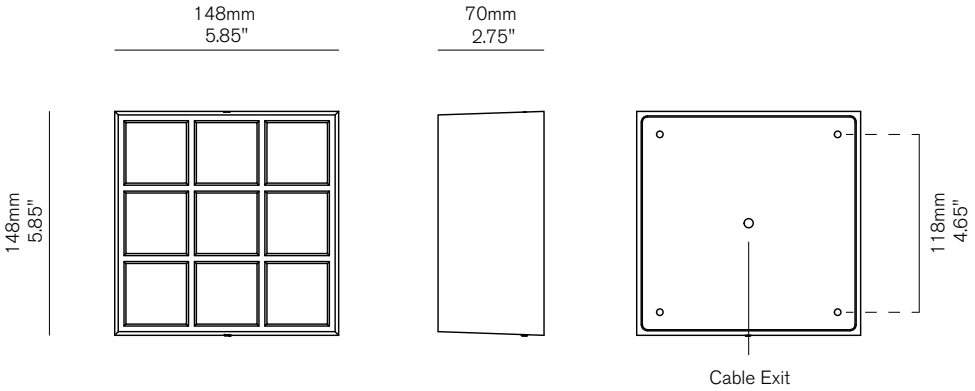

Material
Cast Brass or Cast Aluminium

Finish
Semi-polished

Diffuser
Opal Plate Glass

Weight
Brass 2.9 kg / 6.4 lb
Aluminium 1.3 kg / 2.9 lb

AU / EU / UK
Lamp: 12V LED PCB
Specs: 2700K, 6W
Dimming: Trailing Edge
Driver: 240V (output 12V, 30W)

Optional
DALI, 0-10V



BRUCE

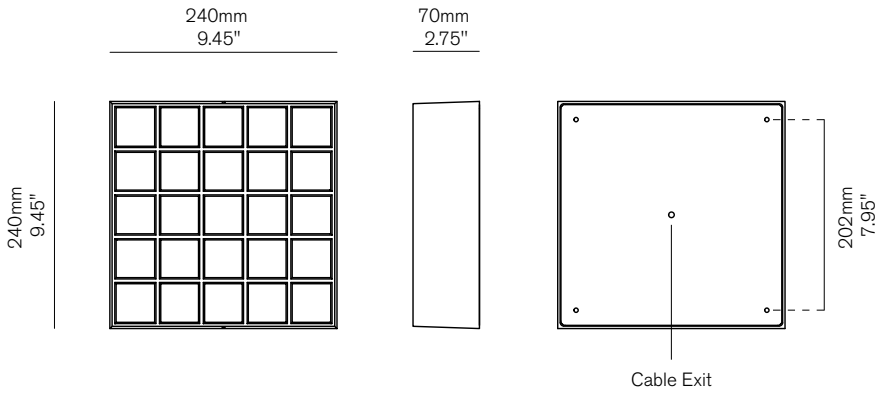

Material
Cast Brass or Cast Aluminium

Finish
Semi-polished

Diffuser
Opal Plate Glass

Weight
Brass 5.8 kg / 12.8 lb
Aluminium 3.4 kg / 7.5 lb

AU / EU / UK
Lamp: 12V LED PCB
Specs: 2700K, 14W
Dimming: Trailing Edge
Driver: 240V (output 12V, 30W)

Optional
DALI, 0-10V



BRUCE DOUBLE

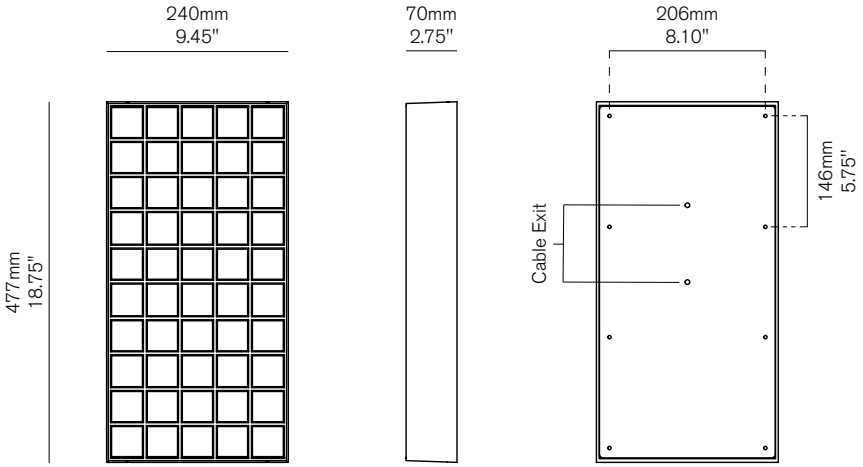

Material
Cast Brass or Cast Aluminium

Finish
Semi-polished

Diffuser
Opal Plate Glass

Weight
Brass 16 kg / 35 lb
Aluminium 6 kg / 13 lb

AU / EU / UK
Lamp: 12V LED PCB
Specs: 2700K, 28W
Dimming: Trailing Edge
Driver: 240V (output 12V, 75W)

Optional
DALI, 0-10V



BRUCE HIGHRISE

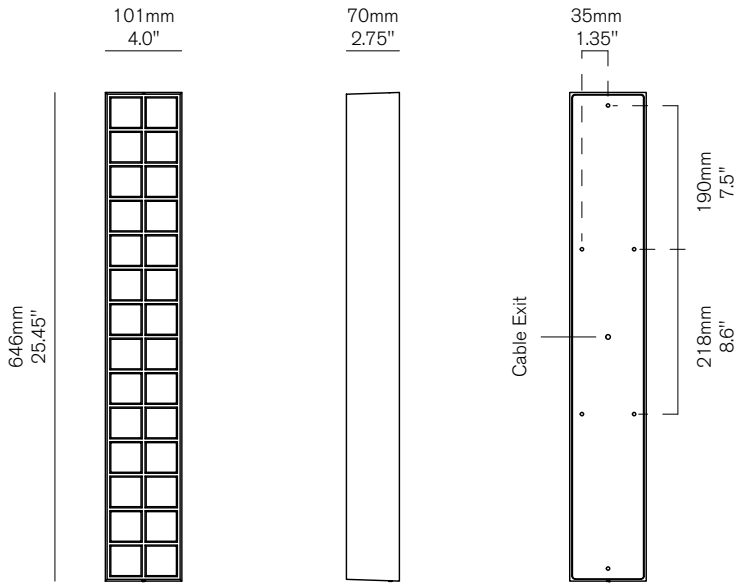

Material
Cast Brass or Cast Aluminium

Finish
Semi-polished

Diffuser
Opal Plate Glass

Weight
Brass 8.4 kg / 18.5 lb
Aluminium 3.6 kg / 8 lb

AU / EU / UK
Lamp: 12V LED PCB
Specs: 2700K, 32W
Dimming: Trailing Edge
Driver: 240V (output 12V, 75W)

Optional
DALI, 0-10V



ME, MYSELF AND I

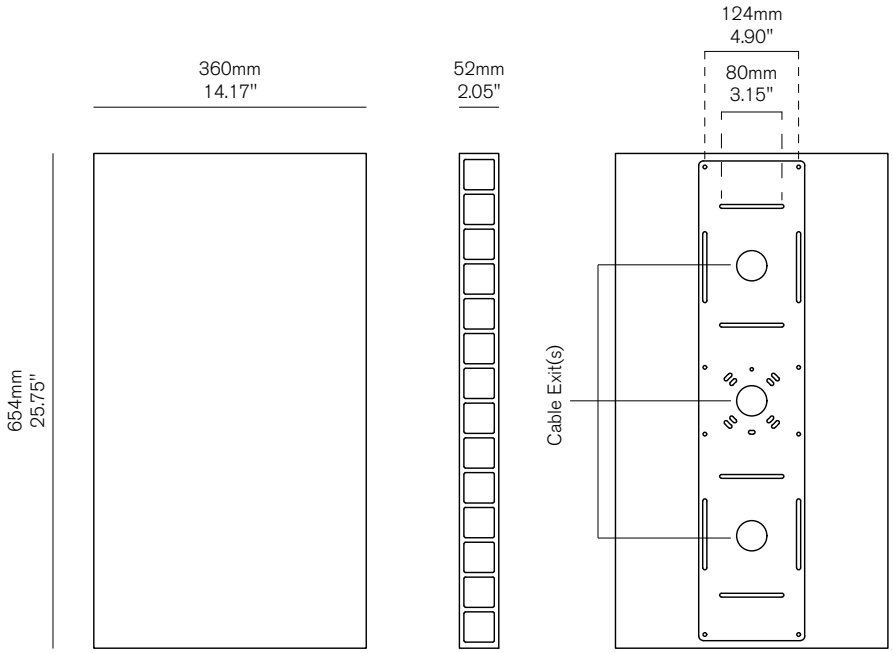

Material
Cast Brass or Cast Aluminium

Finish
Semi-polished

Diffuser
Opal Plate Glass

Weight
Brass 21 kg / 46 lb
Aluminium 10 kg / 22 lb

AU / EU / UK
Lamp: 12V LED
Specs: 2700K, 23W
Dimming: Trailing Edge
Driver: 240V (output 12V, 30W)

Optional
DALI, 0-10V



LUCKY

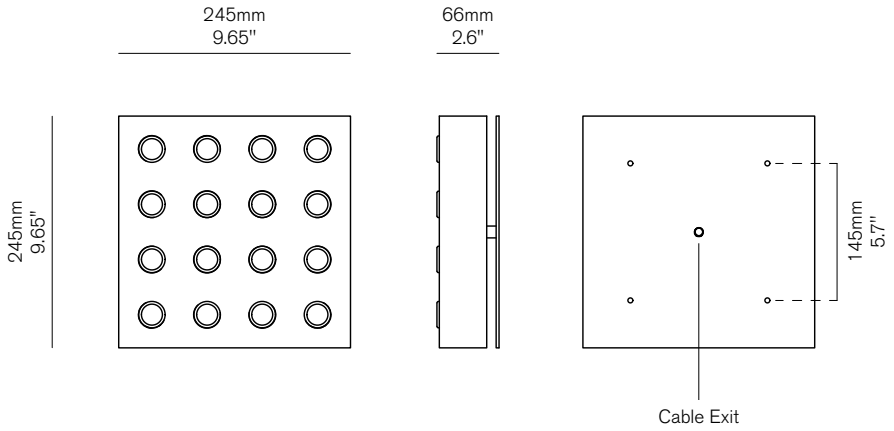

Material
Brass

Finishes
Brushed, Aged or Bronzed Brass;
Chrome, Brushed Nickel

Diffuser
Clear or Tinted Plate Glass

Weight
4.3 kg / 9.5 lb

AU / EU / UK
Lamp: 12V LED PCB
Specs: 2700K, 14W
Dimming: Trailing Edge
Driver: 240V (output 12V, 30W)

Optional
DALI, 0-10V



LUCKY STUD

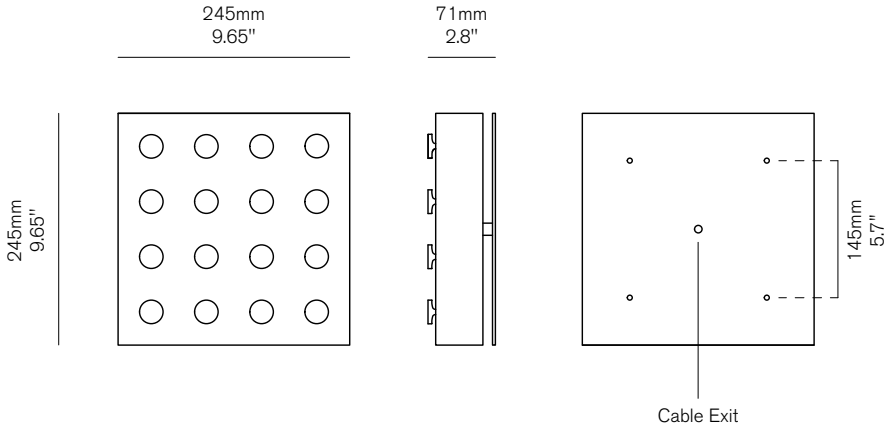

Material
Brass

Finishes
Brushed, Aged or Bronzed Brass;
Chrome, Brushed Nickel

Weight
4.3 kg / 9.5 lb

AU / EU / UK
Lamp: 12V LED PCB
Specs: 2700K, 14W
Dimming: Trailing Edge
Driver: 240V (output 12V, 30W)

Optional
DALI, 0-10V



SUPERSTRADA

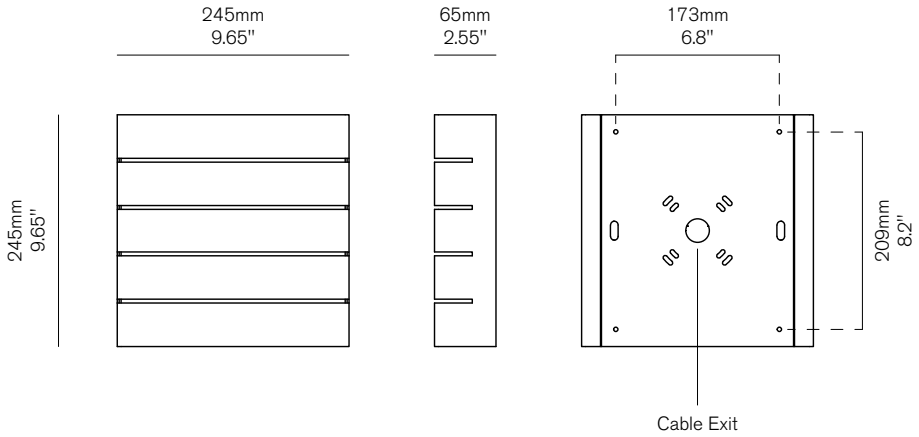

Material
Brass

Finishes
Brushed, Aged or Bronzed Brass;
Chrome, Brushed Nickel; Painted

Diffuser
Opal Acrylic

Weight
3.6 kg / 8 lb

AU / EU / UK
Lamp: 12V LED PCB
Specs: 2700K, 9W, 1200 lm
Dimming: Trailing Edge
Driver: 240V (output 12V, 30W)

Optional
DALI, 0-10V



TROYE

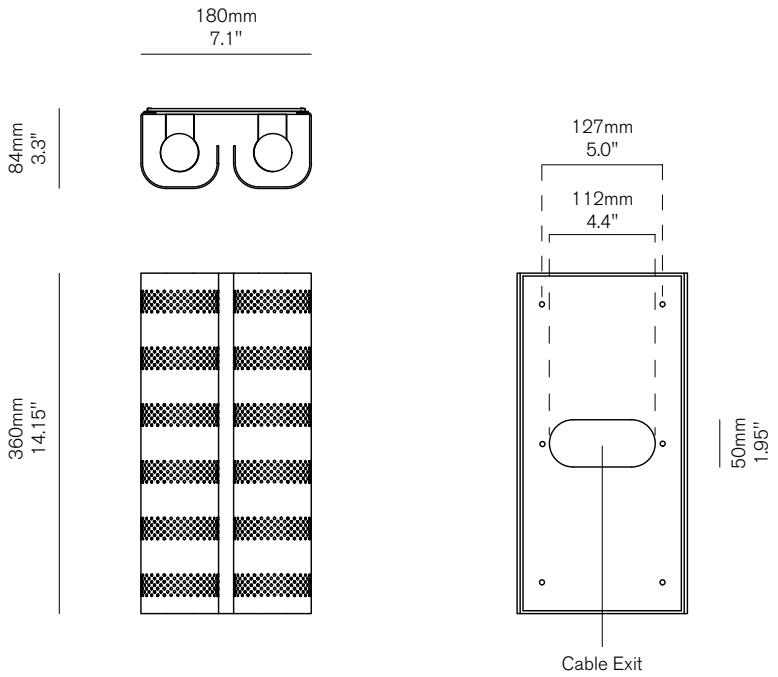

Material
Brass

Finishes
Brushed, Aged or Bronzed Brass;
Chrome, Brushed Nickel

Diffuser
Opal Glass Tube

Weight
5.5 kg / 12 lb

AU / EU / UK
Lamp: 12V LED PCB
Specs: 2700K, 18W, 2400 lm
Dimming: Trailing Edge
Driver: 240V (output 12V, 30W)

Optional
DALI, 0-10V



RUFFLE

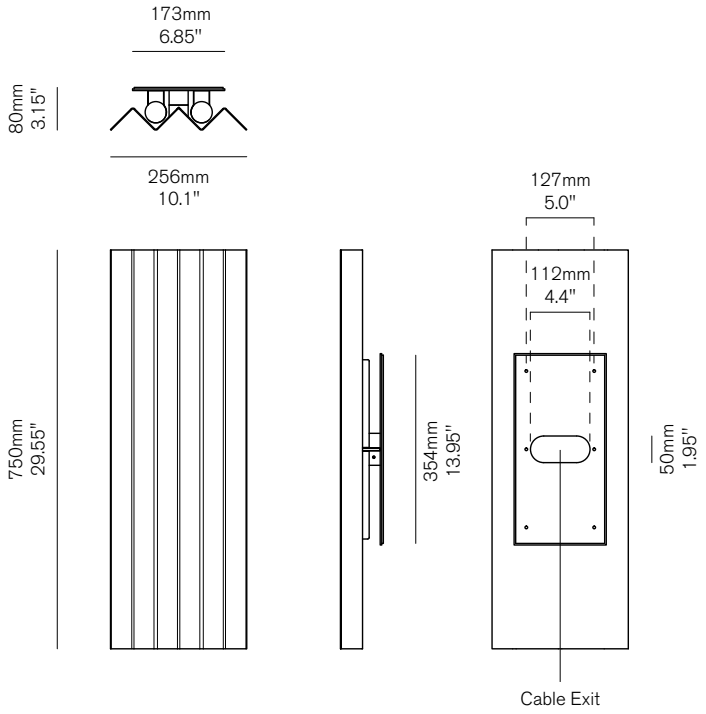

Material
Brass

Finishes
Brushed, Aged or Bronzed Brass;
Chrome, Brushed Nickel

Diffuser
Opal Glass Tube

Weight
7 kg / 15.4 lb

AU / EU / UK
Lamp: 12V LED PCB
Specs: 2700K, 18W
Dimming: Trailing Edge
Driver: 240V (output 12V, 30W)

Optional
DALI, 0-10V

Customisations
Overall Height

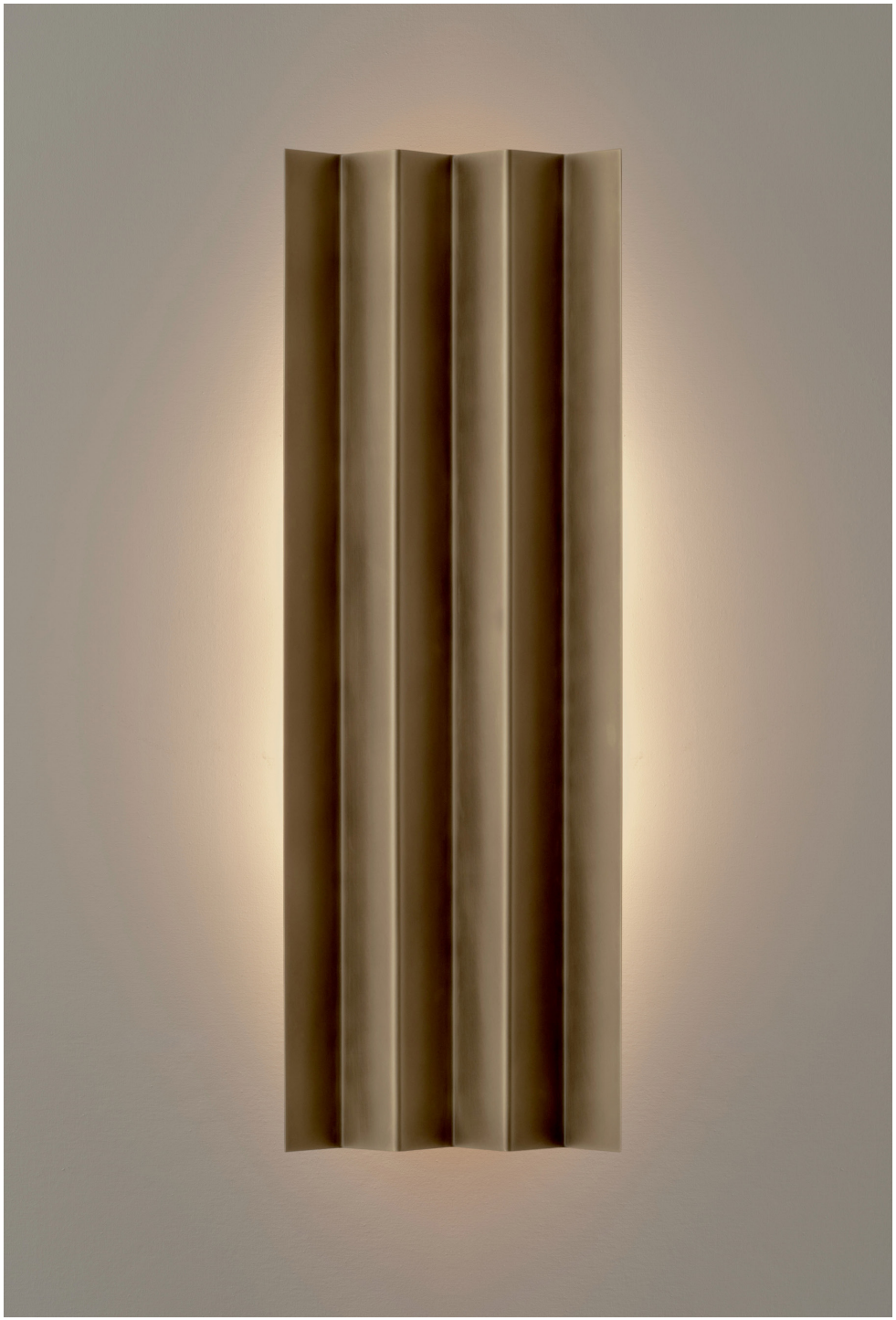

PONY

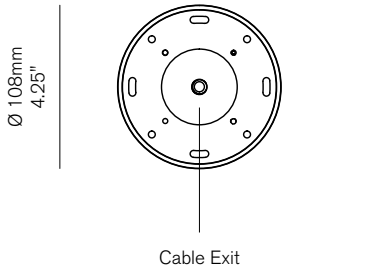

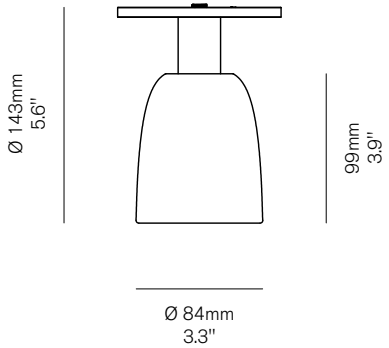

Material
Brass

Finishes
Brushed, Aged or Bronzed Brass;
Polished Brass, Chrome, Brushed Nickel

Beam Angle
26°

Weight
1.5 kg / 3.3 lb

AU / EU / UK
Lamp: 12V LED PCB
Lamp Specs: 2700K, 6W, 550 lm
Dimming: Trailing Edge
Driver: 240V (output 12V, 30W)

Optional
240V, DALI, 0-10V, 40° beam angle



SIDE PONY

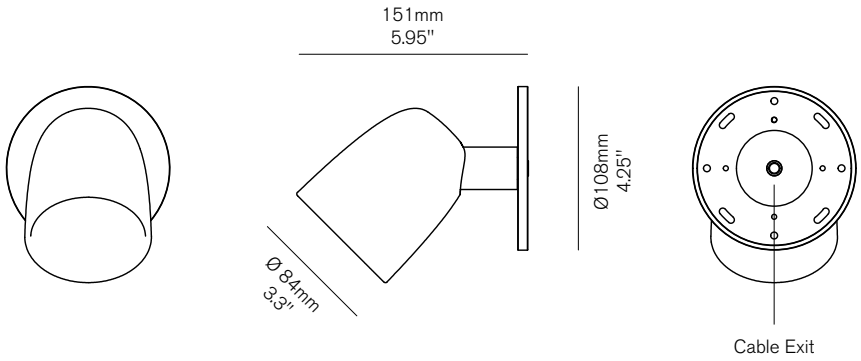

Material
Brass

Finishes
Brushed, Aged or Bronzed Brass;
Polished Brass; Chrome, Brushed Nickel

Beam Angle
26°

Weight
1.5 kg / 3.3 lb

AU / EU / UK
Lamp: 12V LED PCB
Lamp Specs: 2700K, 6W, 550 lm
Dimming: Trailing Edge
Driver: 240V (output 12V, 30W)

Optional
240V, DALI, 0-10V, 40° beam angle



PONY ON POLE

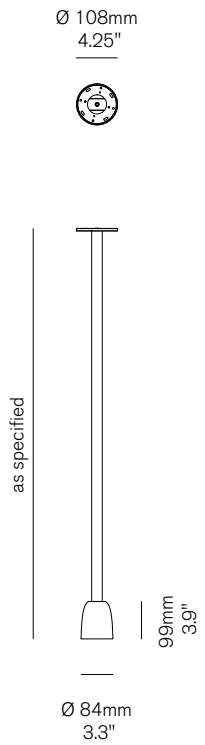

Material
Brass

Finishes
Brushed, Aged or Bronzed Brass;
Polished Brass, Chrome, Brushed Nickel

Beam Angle
26°

Weight
Minimum 2 kg / 4.4 lb

AU / EU / UK
Lamp: 12V LED PCB
Lamp Specs: 2700K, 6W, 550 lm
Dimming: Trailing Edge
Driver: 240V (output 12V, 30W)

Optional
240V, DALI, 0-10V, 40° beam angle



ME AND YOU MOUNT PLATE

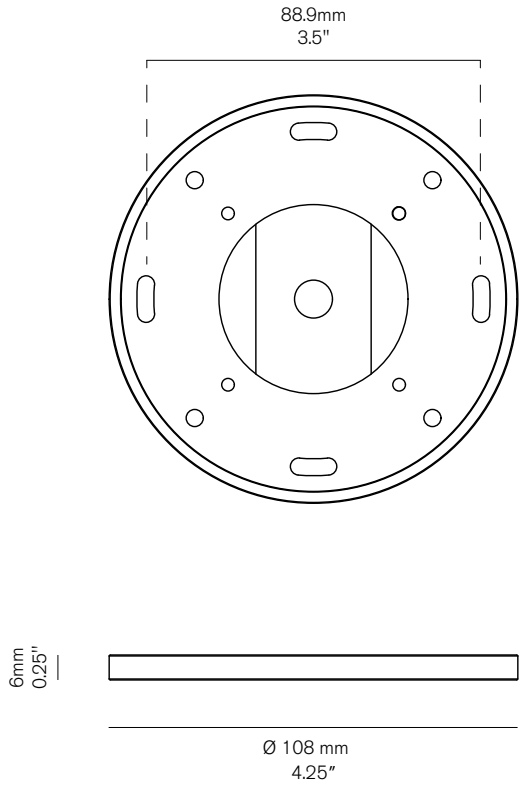

Ceiling / Wall Mount (Ø 108 x 6 mm)

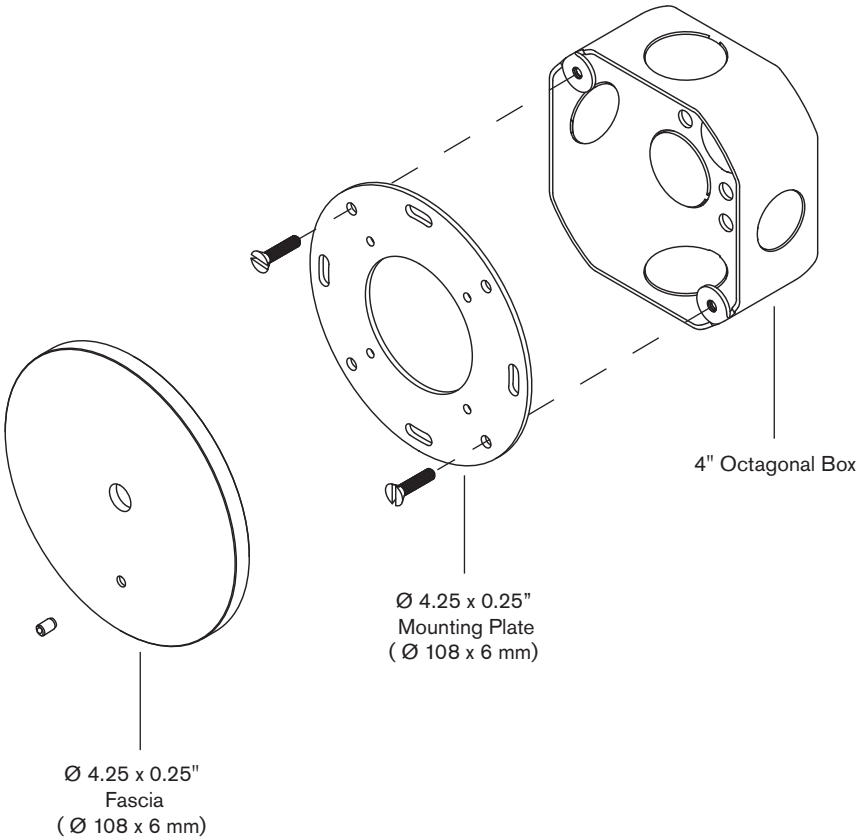

Me and You was born out of minor calamity: a glass fitting from a vintage wall sconce was irreparably broken during a Flack install. With the back plate already in place, Flack called on Volker Haug to urgently design a new, site-specific fitting.

The incident was a potent reminder of the powerful possibilities for collaboration, and it fast developed into a provocation for more expansive creation.

Inspired by the vintage sconce's fixed back plate dimensions, these were set as an initial constraint for investigations with material and form. The studios began toying through different models, metals and attributes within these physical and artistic confines. Eventually, they loosened ties on their parameters to allow an uncompromised, natural design process to take over.

Fueled by simpatico and shared aesthetic sensibilities, a long history of friendship, and neighbourly proximity, the rapid-fire nature of ideating, prototyping, and editing was an experience of total cohesion. The error that instigated the collaboration ultimately gave rise to a playful and friendly design process.

As the name suggests, Me and You speaks to the collaboration, but also to the inherent interplay of light and space—a relationship that the studios believe is perhaps the most important decision of the design process. The duet between lighting and its environments determines atmosphere, and soft-spokenly holds immense power in forming an experience. With this in mind, the studios envisioned Me and You participating and interacting in space all at once.

The collection represents Flack and Volker Haug's shared belief in the truth of materials, and their innate ability to speak for their own beauty and radiance.

– Melbourne, April 2024

VOLKER HAUG

v.01.2025

2–12 St Phillip Street
Brunswick East, Vic 3057
Melbourne, Australia

Phone +61 3 9387 1803
Email info@volkerhaug.com
www.volkerhaug.com