ANTON Series

LONGTON 12V
Installation

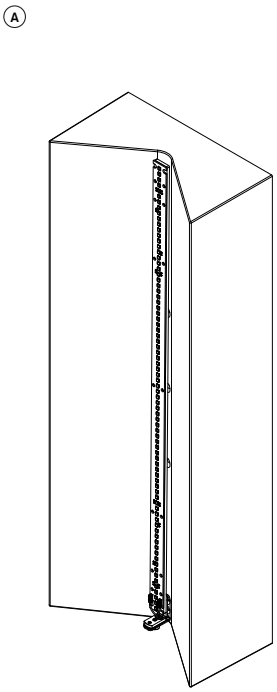

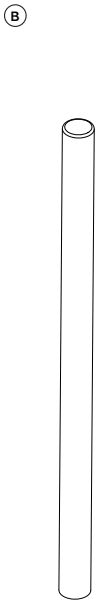

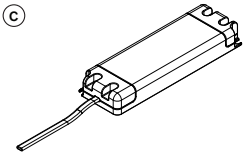

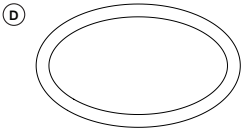

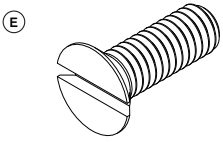

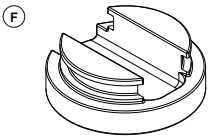

COMPONENTS

A. Longton Body Assembly
B. Glass Diffuser
C. 12 V Driver
D. O-Ring
E. M4 Slotted Fixing Screw
F. End Cap

Not supplied: Wall Fasteners [minimum ×4] to be supplied by the site installation team to ensure suitability for the wall substrate, installation conditions and applicable local regulations.

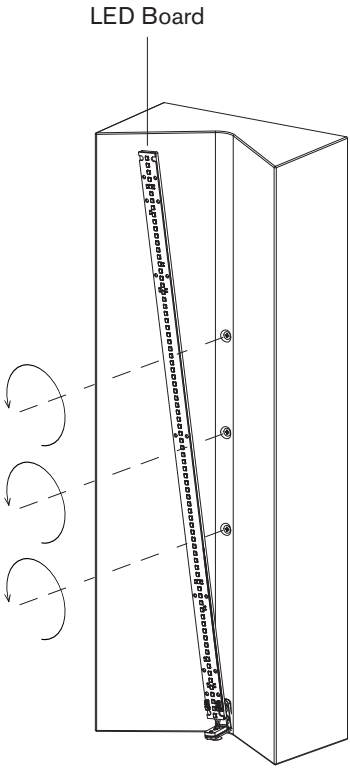

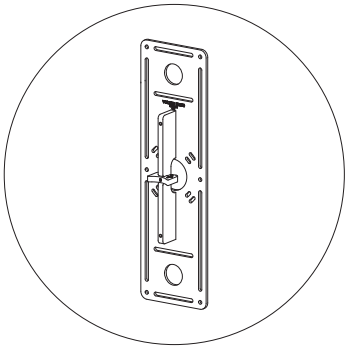

Backing Mount

Step 1. The LED Board (pictured) on the Longton Body Assembly Ⓐ is delivered slightly loose to enable access to the screws that secure the Backing Mount.

Move the LED Board, and unscrew the three screws to remove the Backing Mount (pictured).

Note: Installation must be completed by a licenced electrician and in compliance with all local laws and regulations.

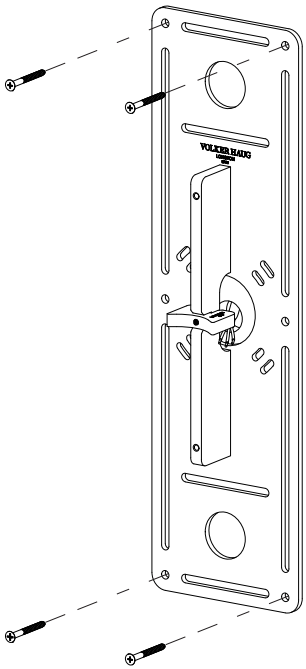

Step 2. Licenced electrician to install the 12V Driver ⓒ up to 10 meters away from install location.

Step 3. Connect mains power to 12V Driver ⓒ and route 12V supply cable to install location.

Step 4. To support the weight of the fitting, we recommend at least four fixing screws Secure Backing Mount with fasteners.

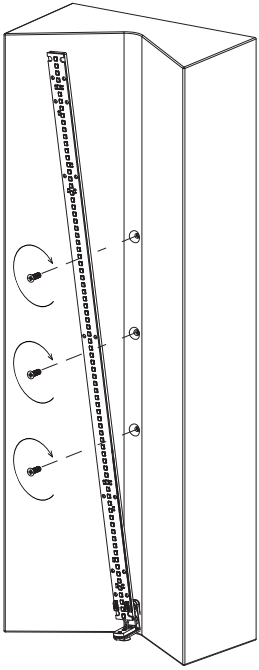

Step 5. Connect cable to 12V supply cable using wire connectors or terminal block.

Step 6. Place the Longton Body Assembly Ⓐ over the Backing Mount, and align the fixing holes with the three holes on the Backing Mount.

Step 7. Take the same screws that were used in Step 1, insert each screw and tighten until you feel resistance.

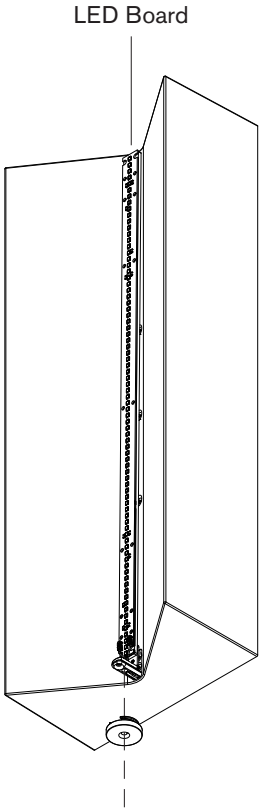

Step 8. Adjust the LED Board (pictured) so it is vertically level and aligned with the Longton Body Assembly Ⓐ.

Step 9. Take the End Cap Ⓕ and place it at the base of the LED Board, aligning it with the hole at the end of the LED Board Assembly.

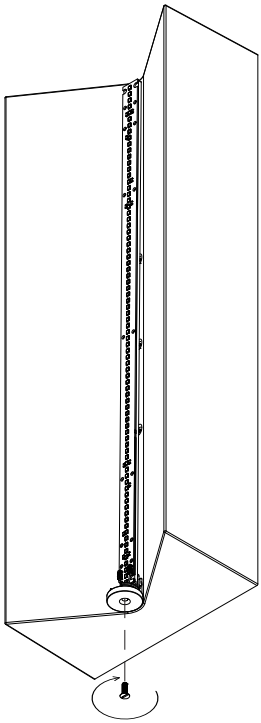

Step 10. Secure the End Cap Ⓕ by inserting the M4 Slotted Fixing Screw Ⓔ into the hole, and making sure it aligns with the same hole on the LED Board Assembly as Step 9.

Step 11. Tighten screw until you feel a resistance.

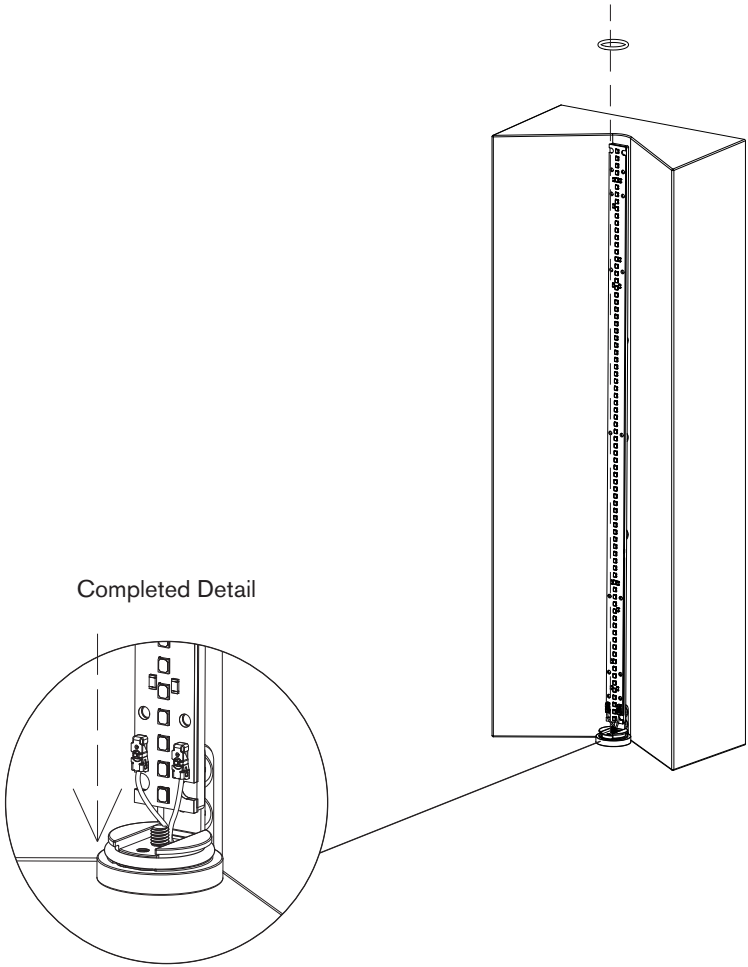

Step 12. Take the O-Ring Ⓓ and slide it over the LED Board and fit it into the channel on the End Cap Ⓕ.

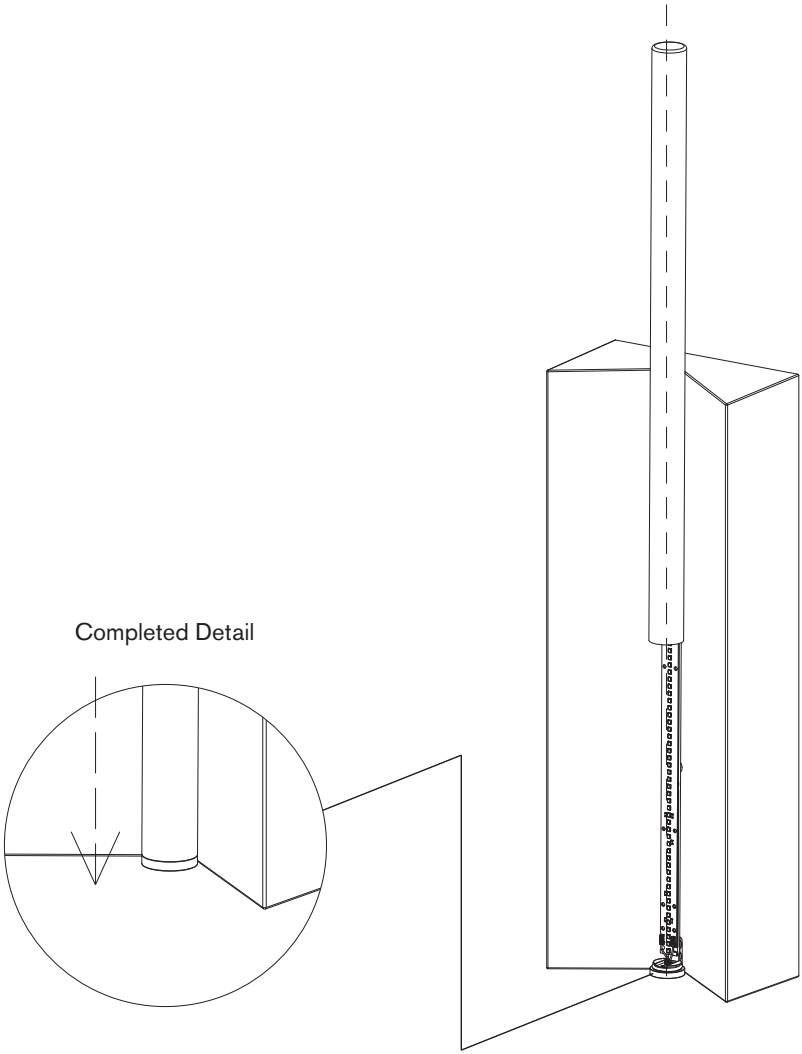

Step 13. Take the Glass Diffuser Ⓑ and carefully slide it over the LED Board.

Step 14. Gently press the Glass Diffuser Ⓑ into the O-Ring Ⓓ and End Cap Ⓕ.

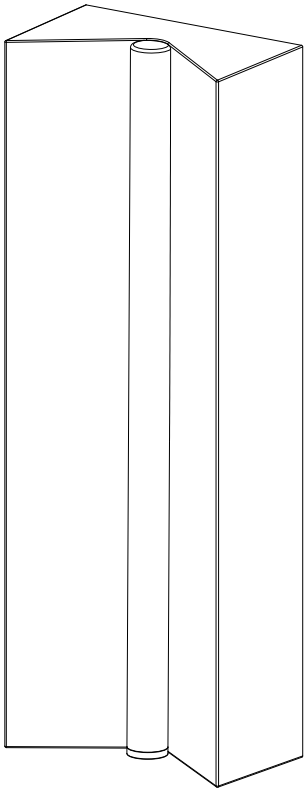

Step 15. Test Longton by turning on power and/or by using dimming control, and enjoy.

