STEP & KICK Series

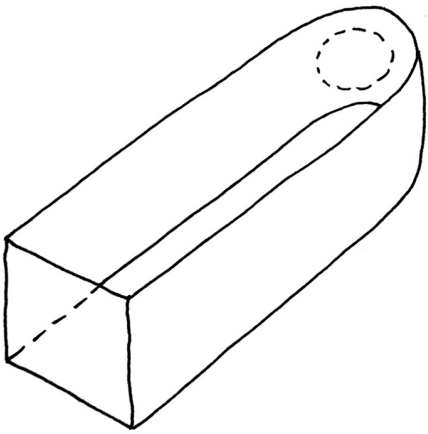

# TRIPLE KICK SOLID
Installation

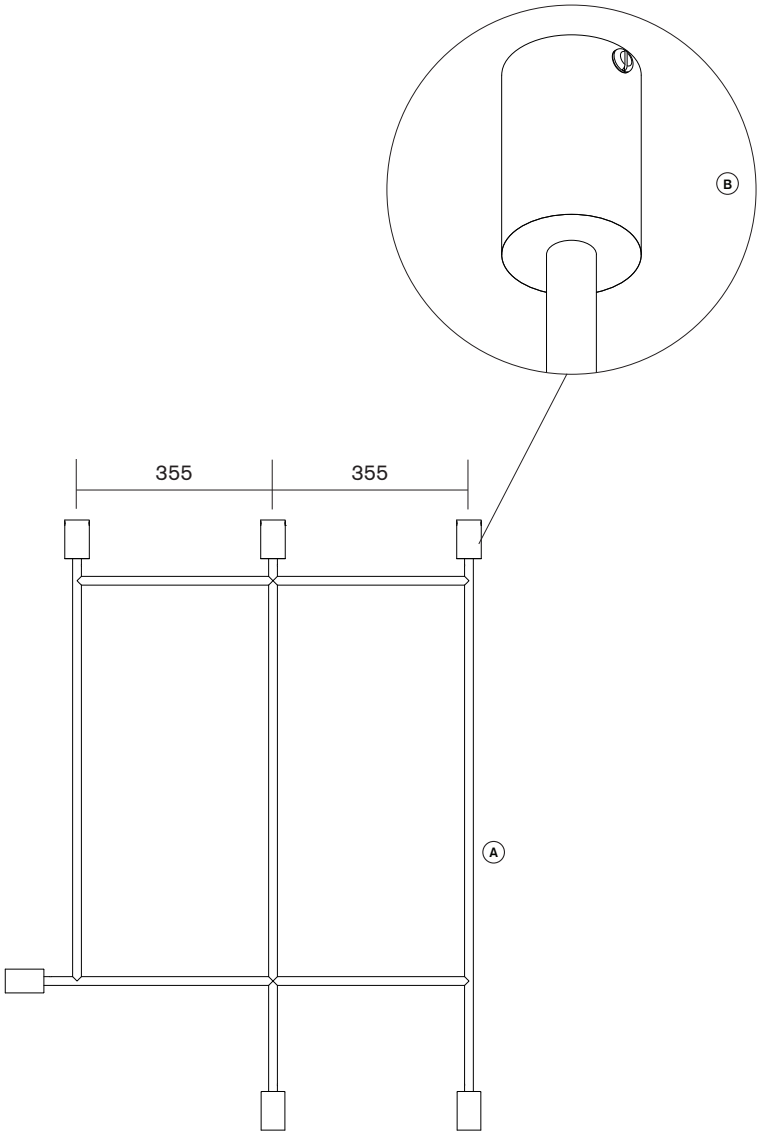


**Note:** Installation must be completed by a licenced electrician and in compliance with all local laws and regulations.



Ⓒ

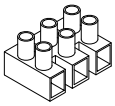

Ⓓ



Ⓔ

Optional (12V version only)

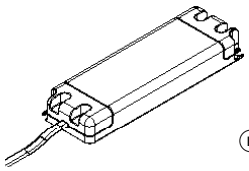

Ⓕ



Ⓖ

## COMPONENTS

A. Frame
B. Ceiling Cup
C. Ceiling Mount [×3]
D. Terminal Block
E. Ceiling Cup Fastener [×6]
F. 12V Driver (optional)
G. Lamp [x3]

---

**Not supplied:** Ceiling Mount Fasteners [×4] to be supplied by the site installation team to ensure suitability for the ceiling substrate, installation conditions and all applicable local regulations.

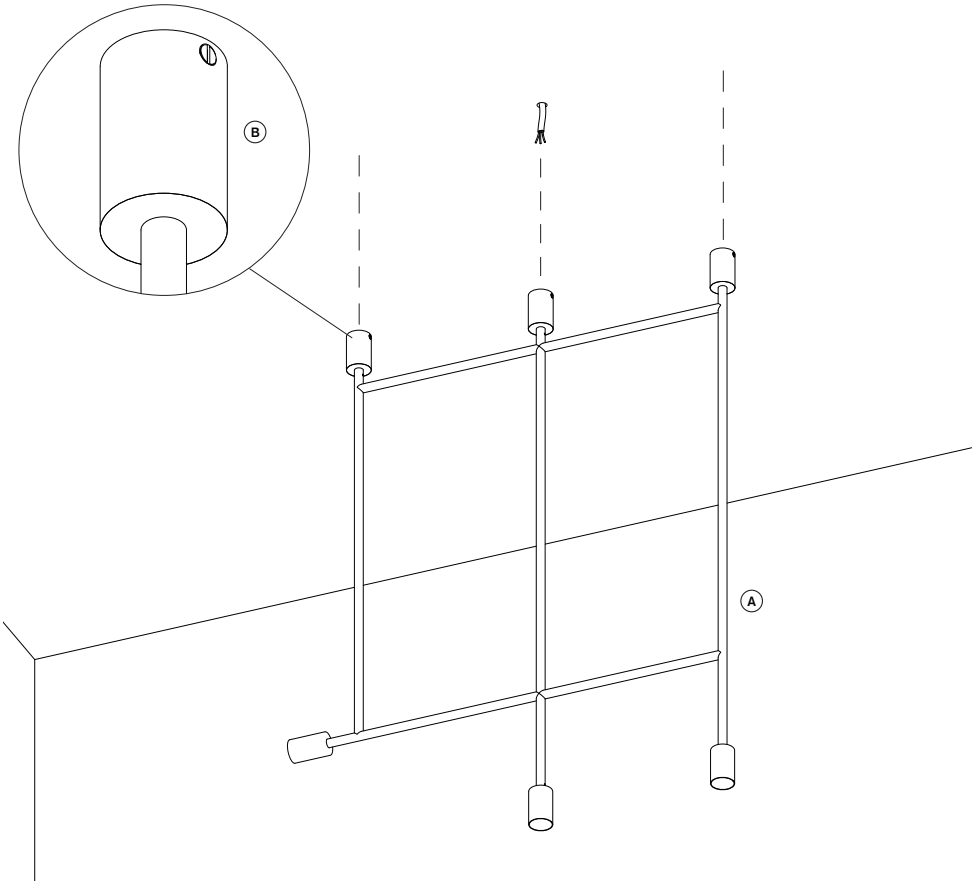


Step 1. Position Ⓐ in the location it is to be installed.

Step 2. Using a pencil, mark the location of Ⓑ [×3] on the ceiling.

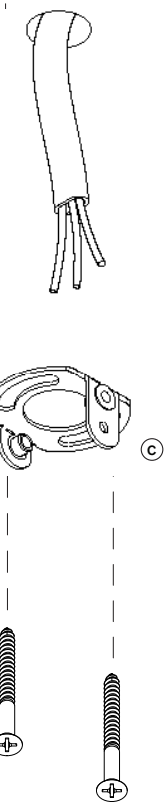


Optional (12V version only)

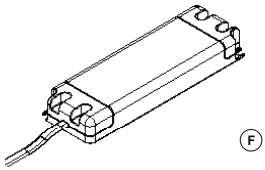


If using a 12V version of the fitting, install the 12V Driver Ⓕ in a safe location, ideally accessible for maintenance and within 3 metres of the fitting.

Connect Ⓕ to mains power and run 12V cable from Ⓕ to the Ceiling Cup Ⓑ which provides power to the fitting.

Step 3. Place each Ceiling Mount Ⓒ [×3] so that the side holes run parallel to horizontal arm of Frame Ⓐ.

Step 4. Fix Ceiling Mount Ⓒ [×3] into ceiling with suitable Ceiling Mount Fasteners [×6] (supplied by installation team).

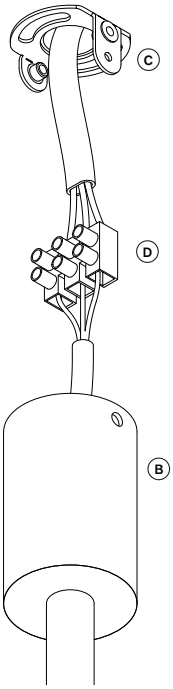


Step 5. Connect cable inside Ceiling Cup Ⓑ to power using supplied Terminal Block Ⓓ.

Step 6. Conceal Terminal Block Ⓓ in either the ceiling cavity or inside Ceiling Cup Ⓑ.

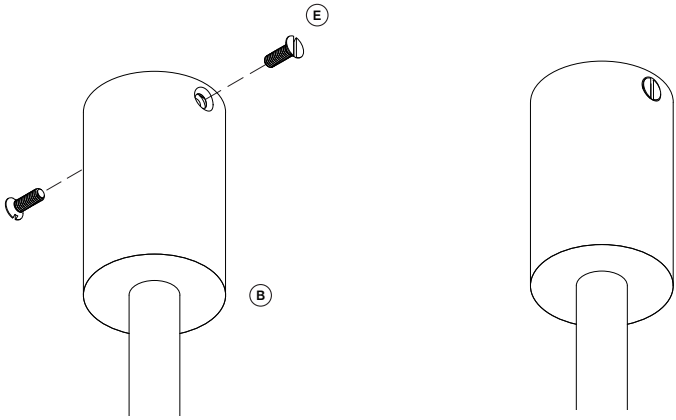


Step 7. Holding Ceiling Cup Ⓑ in place against ceiling, insert Ceiling Cup Fasteners Ⓔ [×3] and tighten, taking care not to scratch the finish of the fastener or the Ceiling Cup.

Step 8. Repeat this step for all three Ceiling Cup locations.

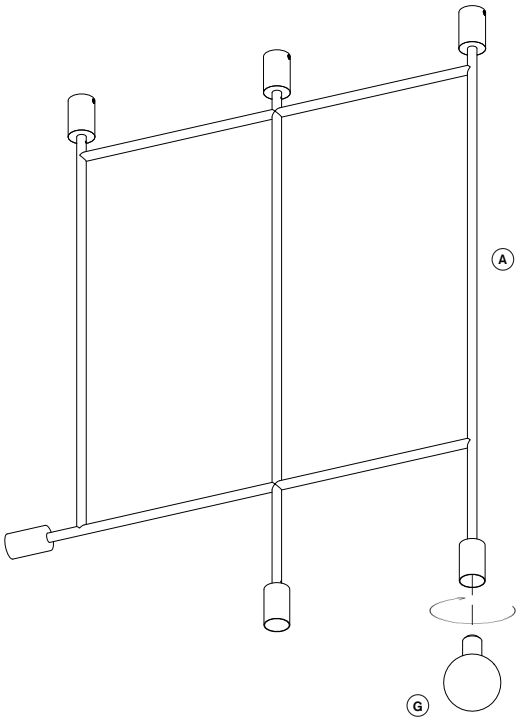


Step 9. Insert Lamp Ⓖ [×2] into lampholders and gently tighten in a clockwise direction.

Step 10. Test the fitting by turning on power switch and/or by using dimming control.

